VOGEL
ANTRIEBSTECHNIK

Servo gearboxes

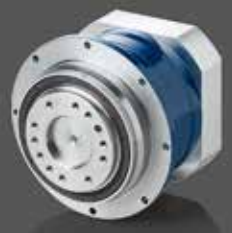

SERVO gears

MECHANICAL gears

INDUSTRIAL gears

WELCOME TO VOGEL ANTRIEBSTECHNIK

We thank you for your interest in our low backlash gearboxes. VOGEL Antriebstechnik has been highly regarded for more than 70 years offering a wide variety of products to a broad range of business sectors with applications that require innovative, dependable gearbox manufacturing technology. We develop high quality products that are very convincing with their precision, long service life and a high power density. We take advantage of a continuous dialogue with our customers and of constant communication with research and scientific sources.

Our primary focus is to supply you, our customer and partner, with the most cost-effective and efficient product solutions for your needs, in order to safeguard your viability in future markets.

Allow our products and services to win you over.

Up-to-date + compact
All product information can be downloaded from
www.vogel-antriebe.de

CONTENTS

Product finder ..... Page 4
Company ..... Page 6
Dimensioning ..... Page 16
Product data ..... Page 22

COAXIAL	**Low backlash gearboxes**	from page 24	**MPR, MPRN, MPRW** Page 24
			MPG Page 38
			MPL Page 50
ANGULAR	**Servo spiral bevel gearboxes**	from page 62	**SK, SKN** Page 62
			SKH Page 68
			SKPR, SKPRN Page 74
			SKPRW Page 82
			SKPG Page 86
	Spiral bevel gearboxes	from page 104	**ML** Page 104
			MH Page 110
			MH with shrink disc Page 114
	Bevel helical gearboxes	from page 120	**MKS** Page 120
			MKSH Page 126
			MKSHF with output flange Page 132
			MKSH hollow shaft with shrink disc Page 133

Motormounting ..... Page 134
Distribution partners, contact, order ..... Page 136

Information and liability exclusion:

All contents contained within our catalogue including its design are protected by copyright.
Text and images used within our catalogue were made available and approved for use by Wilhelm VOGEL GmbH Antriebstechnik. All rights are owned by Wilhelm VOGEL GmbH Antriebstechnik. No responsibility is taken for the correctness of information provided. All rights reserved. All information is intended exclusively for private use – commercial use of editorial descriptions and structuring is prohibited. Commercial use of data is also prohibited, e.g. for the construction of own systems and services or directories of any type. No responsibility or liability is assumed for information contained within this catalogue. No form of legal counsel should ensue according to the information contained within this catalogue.

© NOTE: Errors, technical modifications and printing errors reserved.

				Coaxial gearboxes		
				Low backlash planetary gearboxes		
				from page 24	from page 38	from page 50
Gearbox figures	Gearbox type			MPR	MPG	MPL
		Symbol	Unit			
	Ratios	i	[-]	3 to 100	4 to 100	3 to 100
	Max. acceleration torque	T_{2bzul}	[Nm]	44 to 4600	44 to 4500	40 to 500
	Nominal torque	T_{2Nzul}	[Nm]	29 to 2600	29 to 3250	25 to 360
	Max. backlash	j	[arcmin]	1 to 8	1 to 8	8 to 10
	Max. input speed	$n_{1maxzul}$	[min^{-1}]	2500 to 6000	2500 to 6000	4500 to 8000
Output variants	Solid shaft with key	–	[–]	○	–	●
	Solid shaft without key	–	[–]	●	–	○
	Splined shaft DIN 5480	–	[–]	○	–	–
	Hollow shaft with keyway	–	[–]	–	–	–
	Hollow shaft with shrink disc	–	[–]	–	–	–
	Flanged shaft	–	[–]	–	●	–
	Output flange	–	[–]	–	–	–
	ATEX design	–	[–]	–	–	–

● marks the standard design
○ marks optionally available designs

Note on use in potentially explosive areas:
European Guideline 94/9/EC for equipment for use in potentially explosive areas (ATEX).
VOGEL spiral bevel gearboxes and VOGEL bevel helical gearboxes are available in an explosion-proof version

Zone Gas	Zone Dust
1	21
2	22

Covered by ATEX gearboxes of the category II 2GD c,k IIB T4 / 120 °C

Angular gearboxes								
Servo spiral bevel gearboxes					Spiral bevel gearboxes		Bevel helical gearboxes	
from page 62	from page 68	from page 74	from page 82	from page 86	from page104	from page 110	from page 120	from page 126
SK	SKH	SKPR (N)	SKPRW	SKPG	ML	MH	MKS	MKSH
3 to 10	3 to 10	12 to 100	12 to 100	12 to 100	3 to 6	3 to 6	6 to 48	6 to 48
54 to 217	54 to 217	100 to 950	120 to 660	100 to 950	18 to 100	18 to 100	130 to 460	130 to 460
40 to 150	40 to 150	70 to 550	58 to 390	70 to 550	12 to 75	12 to 75	110 to 400	110 to 400
2 to 5	2 to 5	3 to 5	3 to 5	3 to 5	4 to 7	4 to 7	4	4
6500 to 7500	6500 to 7500	6500 to 7500	2600 to 3100	6500 to 7500	5000	5000	5000	5000
○	–	○	–	–	●	–	●	–
●	–	●	–	–	○	–	○	–
–	–	–	●	–	–	–	–	–
–	–	–	–	–	–	●	–	●
–	●	–	–	–	–	○	–	○
–	–	–	–	●	–	–	–	–
–	–	–	–	–	–	–	–	○
–	–	–	–	–	○	○	○	○

● marks the standard design
○ marks optionally available designs

FUTURE IN MOTION

Continuity and development are mutually dependent cornerstones of our corporate tradition. For the past 60 years we have been constantly committed to products and markets with maximum quality consciousness. As a mid-sized, family owned company this sense of continuity is highly important to us; the executive management in its third generation accepts personal responsibility for this.

On the other hand we actively determine the future of gearbox manufacturing through our technological developments, thus ensuring market capability for our customers. Because the only valid constant is change.

PARTNERSHIP FOR TECHNOLOGY

Efficiency and safety from initial discussions of a project to the finished product and beyond – that is the target of our offensive with respect to quality and service management. We initially carry out a thorough, detailed consultation individually in accordance with the requirements of your application. Once the ideal solution is decided upon, we produce flexibly and on schedule, precisely in accordance with your requirements.

Our customers rightly expect smooth and uninterrupted manufacturing processes. You can count on an almost maintenance-free product over the entire life cycle when using VOGEL gearboxes.

Should you still require our support at some stage, there is a world-wide service network available to assist you as soon as possible with a replacement gearbox or an on-site repair. To keep your production line running!

COMPETENCE IN THE MARKET

VOGEL Antriebstechnik is found everywhere where machinery is built, in all sectors and at all sites. Wherever you manufacture, we will be at your side.

Internationally, our customers are looked after by our distribution and service partner Lenze. That means we have a presence in the important markets and you benefit globally from direct access to our expertise and product ranges.

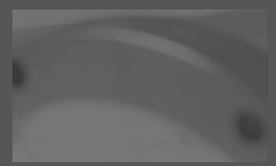

INDUSTRY SOLUTIONS

With VOGEL you stay flexible. For example our modular gearbox system offers you the widest variety of combination possibilities. On the basis of these product standards we can also offer you the desired modifications needed for your field of activity. It goes without saying that such services are cost-optimised and in accordance with your specifications. For unusual requirements we offer entirely individual solutions. In such cases we assess application conditions in cooperation with you, advise you reliably and construct special gearboxes for you, including gear manufacturing.

SUCCESSFUL APPLICATIONS

Our gearboxes have a broad and constantly increasing range of applications.

- Drive and automation engineering
- Robotics and handling
- Packaging machinery
- Plastics and film processing machines
- Printing machinery
- Paper processing
- Machine tools
- The food and pharmaceutical industry

and many more

PRODUCT RANGE

The range of VOGEL Antriebstechnik offers nominal output torques of between 10 Nm and 26000 Nm. Our range of standard solutions extends from classic machinery gearboxes, through compact technology for coaxial and right-angle applications, to our own high-precision servo products. Always in mind: dynamic development of all existing series with the aim of creating optimum drives for our customers, technologically and thus economically.

All VOGEL gearboxes can be combined with each other. In this way you benefit from the advantages of various gearbox types.

SERVO gears

- High speed
- Short cycle times
- Low backlash

Mechanical gears

- Universal application
- Efficient and reliable

Industrial gears

- High torques
- Long life time

Customer-specific solutions

- Special spiral bevel gearboxes
- Special solution for mobile drive technology
- Special planetary gearboxes for high-speed applications
- Gearing technology

and many more

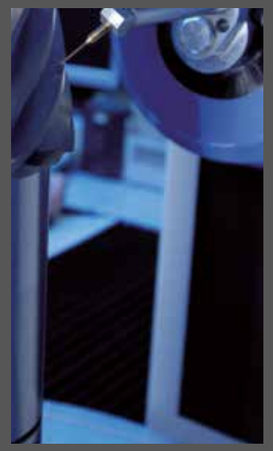

QUALITY

Our internal high standards of quality often far exceed those commonly found in the industry. Because of this extensive and consistent quality control, we are in a position to offer you especially reliable, low-maintenance and durable gearboxes, a factor confirmed again and again in dialogue with our long-term customers.
Our extensive manufacturing expertise within development and production, guarantees noise- and torque-optimised gearing technology at the highest standards. Upon request we can also supply inspection reports or certification for any gearbox, e.g. with respect to run-out error or backlash.

In this way we ensure for you:

- Highest levels of precision and dynamics
- Long product life
- Maximum flexibility
- Maximum environmental compatibility
- Minimal effort for the complete life cycle
- Unbeatable efficiency
- Excellent energy efficiency

CONSULTATION

In every phase of collaboration with VOGEL you benefit from our unique sector-specific expertise, gathered over decades in close cooperation with our national and international partners. We develop concepts together with you for the cost-effective solutions of your application. In this respect we initially analyse and determine the most important environmental parameters such as application conditions, loads, duration of operation, speeds, motion sequences etc. in order to find the best product solution.

SERVICE

Together with our service and distribution partners we make sure that we are there when you need us, whether for supply of parts, repairs and service or technical support, both on a national scale and internationally.

COMMUNICATION

Up-to-date and comprehensive product information, service manuals, catalogues, technical documentation, contact data and quality documents are available to you in a variety of languages via our website. In addition we can provide you with the relevant information on CD-ROM.
For technical data exchange we offer over 100 different interfaces and guarantee support for all globally current CAD software programs, thus shortening development cycles.

TRAINING

Upon request you can take advantage of individual product and service training as well as general educational courses on drive and automation technology. In addition. we are also always pleased to inform you of intelligent maintenance strategies that will optimise your manufacturing performance. Simply contact our service team.

SERVICES

PRECISION

Maximum precision in every detail – that is what sets all VOGEL gearboxes apart. From optimised product geometry and highly precise, fine ground gear teeth to careful mounting. With improved design and minimised tolerances we achieve a remarkably high torsional and tilting rigidity with minimal noise emission and unbeatably quiet running.

FLEXIBILITY

Thanks to their practical design and intelligent construction, our low backlash gearboxes can be used variably across a very wide spectrum of applications. With a large selection of motor adapters, multiple drive combinations are possible. A large ratio range with fine increments renders them absolute all-rounders for all sectors.

COST-EFFICIENCY

A high level of efficiency for maximum cost-effectiveness. With optimised concentration on the smallest possible shaft diameter, we achieve efficient results without friction losses and therefore without loss of energy. Economically, VOGEL also convinces with extremely simple motor mounting – thus saving time, which in turn decisively aids your manufacturing processes.

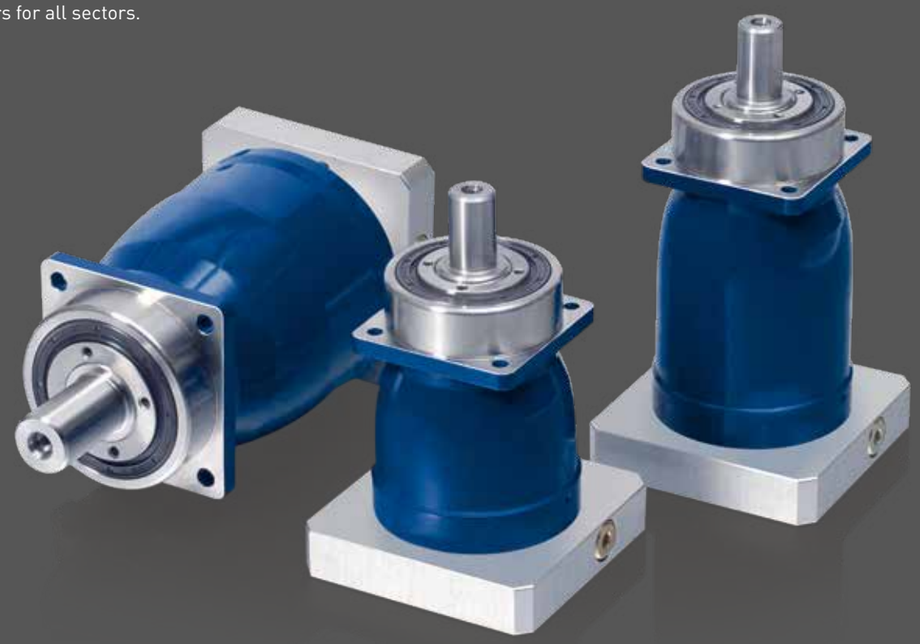

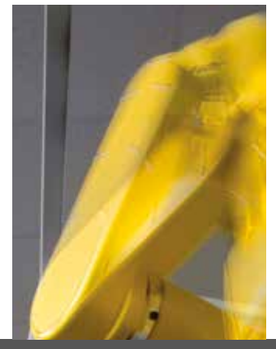

DURABILITY

We place particular emphasis on high quality for all materials, components and parts used. In doing so we are able to guarantee maintenance-free, reliable operation as well as maximum service life even under very high operational stress. Optimal lubrication of gearboxes is guaranteed.

COMPACTNESS

A compact design, short overall lengths – VOGEL Antriebstechnik offers performance and efficiency on a highly compact scale. This is made possible in no small way by helical gear teeth, allowing greater torques with uniform and low-noise drive motion.

DYNAMICS

With strengthened bearings our gearboxes are able to withstand high forces – even with high speeds and in extreme cases when overloaded. This is possible by the implementation of full needle bearings. Low gearbox weight, combined with compact construction offers enhanced inertia values – further proof of the dynamics of our gearboxes.

DIMENSIONING AND SELECTION

Investigation of a gearbox to determine suitability for an application can be carried out by comparison of maximum possible motor torques and gearbox data. In this case the applications are differentiated according to EN 60034-1 with operating mode continuous operation (S1) and cyclic operation (S4/S5).
For cyclic operation, the maximum motor acceleration torque is used. For continuous operation the nominal motor torque is taken into consideration. If the maximum possible motor torque exceeds permissible values of the required gearbox, a recalculation involving the torques actually required by the application must be carried out.

Mounting advice

All specifications are valid for the following ambient conditions:

- No heating of gearbox by the motor
- Mounting plate size /square = 2 x gearbox size
- Mounting plate material = steel
- Unobstructed thermal convection / no housing encloses gearbox
- Ambient temperature = maximum +30 °C
- The operating mode is S5
  Please contact us if you intend to use other operating modes

Formula symbols and indices

Designation	Unit	Symbol
Rigidity	Nm/arcmin	C
Duty cycle	%	ED
Runtime	min	EZ
Load	N	F
Dynamics factor	-	k
Ratio	-	i
Backlash	arcmin	j
Inertia	$kgcm^2$	J
Factor for bearing calculation	-	KL
Factor for bearing calculation	-	f
Live time	h	L_{10h}
Running noise	dB(A)	L_{PA}
Mass	kg	m
Tilting moment	Nm	MK
Speed	min^{-1}	n

Designation	Unit	Symbol
Factor for bearing calculation	-	p
Efficiency	%	η
Time	s	t
Torque	Nm	T
Distance of lateral force to shaft collar	mm	x
Distance of axial force to gearbox centre	mm	y
Distance for bearing calculation	mm	a
No. of cycles	1/h	Z
Screw clamping torque	Nm	MA
Length	mm	L, l
Diameter	mm	D, d

Designation	Indices
Permissible values	zul
Input	1
Output	2
Axial	a
Acceleration	b
Hours	h
Average	m
Minimum	min
Maximum	max
Nominal	N
Emergency stop	Not
Radial	r
Motor	Mot
Output shaft	W
Output bearings	L

GEARBOX PRESELECTION

Gearbox preselection cannot be a substitute for a detailed gearbox selection.

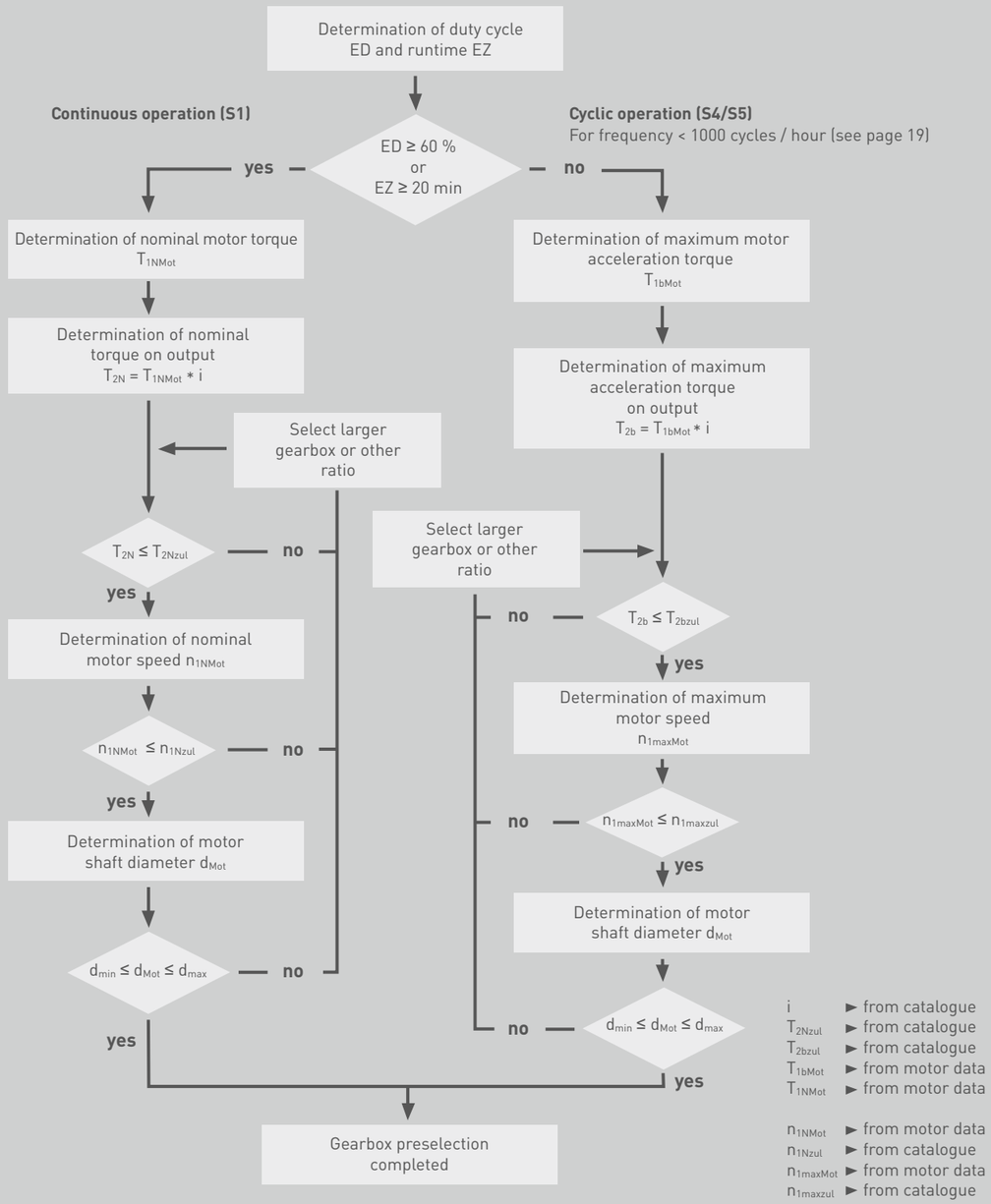

Determination of duty cycle ED and runtime EZ

$ED = \frac{(t_b + t_d + t_v)}{(t_b + t_d + t_v + t_p)} * 100$ [%]

$EZ = t_b + t_d + t_v$ [min]

ED ≤ 60 % or EZ ≤ 20 min

no → Continuous operation S1: Consultation with Vogel Antriebstechnik is necessary → Approval Vogel Antriebstechnik

no → Select other solution (in case of questions please contact us)

yes → **yes / cyclic operation**

Determination of number of cycles Z

$Z = \frac{3600}{(t_b + t_d + t_v + t_p)}$ $\left[\frac{1}{h}\right]$

Determination of dynamic factor k — k from table 1

Determination of max. acceleration torque on output T_{2bmax}

$T_{2bmax} = T_{2bzul} * k$ [Nm]

$T_{2bmax} \leq T_{2bzul}$

no → Select larger gearbox

yes

Determination of max. output speed n_{2max} [min⁻¹]

Determination of ratio i

$n_{1max} \leq n_{1maxzul}$

no → Smaller ratio i

yes

Determination of emergency stop torque T_{2Not}

$T_{2Not} \leq T_{2Notzul}$

no → Select larger gearbox

yes → 2

1

i dependent upon:

n – required output speed (application)
– practical input speed (gearbox/motor)
$n_{1max} = n_{2max} * i$
$n_{1max} \leq n_{1maxMot}$

T – as from input and output torque
$T_{1b} = T_{2b} * \frac{1}{i} * \frac{1}{\eta}$ $T_{1b} \leq T_{1maxMot}$

λ – from resulting inertia condition

Guideline value:

$1 \leq \lambda \leq 10$

$\lambda = \frac{J_{external}}{J_{internal}}$

1

2

Determination of average output torque T_{2m}

$T_{2m} = \sqrt[3]{\frac{\left|n_{2b} * t_b * T_{2b}^3\right| + \ldots + \left|n_{2v} * t_v * T_{2v}^3\right|}{\left|n_{2b} * t_b\right| + \ldots + \left|n_{2v} * t_v\right|}}$ [Nm]

$T_{2m} \leq T_{2Nzul}$

no → Select larger gearbox

yes

Determination of average input speed n_{1m}

$n_{1m} = n_{2m} * i$

$n_{2m} = \frac{\left|n_{2b} * t_b\right| + \ldots + \left|n_{2v} * t_v\right|}{t_b + \ldots + t_v}$ [min⁻¹]

include. idle time

$n_{1m} \leq n_{1Nzul}$

no → Smaller ratio i

yes

Select motor

Compare shaft locking bush with motor diameter

$d_{min} \leq d_{Mot} \leq d_{max}$

The motor shaft must fit in the shaft locking bush. Motor shaft length: see dimensional drawings

no → Select other motor or other gearbox (in case of questions please contact us)

yes

$T_{2\,max\,Mot} = T_{1\,max\,Mot} * i * \eta_{gearbox}$

With motor at full load, the gearbox must not become damaged; limit motor current if applicable.

$T_{2maxMot} \leq T_{2bzul}$

no → Limit motor current

yes

Calculation of bearing load and bearing life time (see pages 20, 21)

3

Table 1: Dynamic factor k

No. of cycles Z [1/h]			Dynamic factor k
from		to	
0	–	999	1
1000	–	1499	0,94
1500	–	1999	0,83
2000	–	2499	0,75
2500	–	2999	0,68
3000	–	3499	0,63
3500	–	3999	0,59
4000	–	4499	0,56
4500	–	4999	0,53
5000	–	5499	0,51
5500	–	5999	0,5
6000	–	6499	0,49
6500	–	6999	0,48
7000	–	7499	0,47
7500	–	~	0,46

Diagram 1: Load profile on output

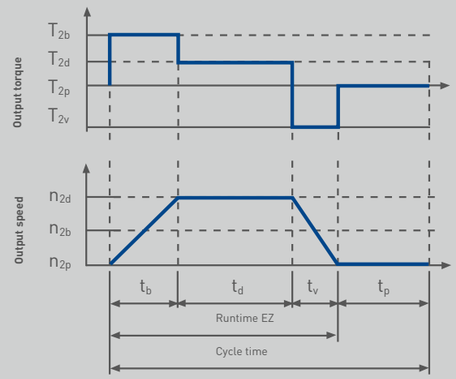

3

Determination of average axial load and radial load F_{2am}, F_{2rm}

$$F_{2am} = \sqrt[3]{\frac{\left|n_{2b} * t_b * F_{2ab}^3\right| + \ldots + \left|n_{2v} * t_v * F_{2av}^3\right|}{\left|n_{2b} * t_b\right| + \ldots + \left|n_{2v} * t_v\right|}} \text{ [N]}$$

$$F_{2rm} = \sqrt[3]{\frac{\left|n_{2b} * t_b * F_{2rb}^3\right| + \ldots + \left|n_{2v} * t_v * F_{2rv}^3\right|}{\left|n_{2b} * t_b\right| + \ldots + \left|n_{2v} * t_v\right|}} \text{ [N]}$$

$\frac{F_{2am}}{F_{2rm}} \leq f_2$, $x_2 > 0$

no → Please contact us

yes ↓

Determination of average tilting moment MK_{2m}

$$MK_{2m} = \frac{F_{2am} * y_2 + F_{2rm} * (a_2 + x_2)}{1000} \text{ [Nm]} \quad 1)$$

Determination of maximum tilting moment MK_{2maxW}

$$MK_{2max\,W} = \frac{F_{2a\,max} * y_2 + F_{2rmax} * x_2}{1000} \text{ [Nm]} \quad 1), 2)$$

Determination of maximum tilting moment MK_{2maxL}

$$MK_{2max\,L} = \frac{F_{2a\,max} * y_2 + F_{2rmax} * (a_2 + x_2)}{1000} \text{ [Nm]} \quad 1)$$

1) a_2. x_2. y_2 in mm, see page 21

2) calculation for MPR and MPL

$MK_{2maxL} \leq MK_{2zulL}$
$MK_{2maxW} \leq MK_{2zulW}$
$F_{2amax} \leq F_{2azul}$

no → Select larger gearbox

yes ↓

Determination of average speed n_{2m}

$$n_{2m} = \frac{\left|n_{2b} * t_b\right| + \ldots + \left|n_{2v} * t_v\right|}{t_b + \ldots + t_v} \text{ [min}^{-1}\text{]}$$

Determination of life time L_{10h}

$$L_{10h} = \frac{16666}{n_{2m}} * \left[\frac{KL_2}{MK_{2m}}\right]^{p_2} \text{ [h]}$$

Is the life time L_{10h} sufficient?

no → Select larger gearbox

yes ↓

Calculation of bearing life time completed

Gearbox type		MPR						
Gearbox size		**050**	**100**	**200**	**300**	**400**	**500**	**600**
f_2		0,40	0,40	0,40	0,40	0,40	0,40	0,40
a_2	mm	40,3	47,1	57,8	76,5	88,5	98,5	108,5
MK_{2zulL}	Nm	147	261	547	1111	2008	3171	5205
MK_{2zulW}	Nm	38	72	183	388	636	1103	1950
KL_2		810	1230	2625	5360	10955	16455	21170
p_2		3,33	3,33	3,33	3,33	3,33	3,33	3,33

Gearbox type		MPG						
Gearbox size		**050**	**100**	**200**	**300**	**400**	**500**	**600**
f_2		0,37	1,14	0,37	0,37	0,37	0,37	0,37
a_2	mm	60,8	75,0	100,5	81,3	115,8	135,6	154,8
MK_{2zulL}	Nm	115	250	463	1337	3530	5758	8739
KL_2		558	1015	1995	3920	11145	19405	28600
p_2		3,33	3,00	3,33	3,33	3,33	3,33	3,33

Gearbox type		MPL			
Gearbox size		**050**	**100**	**200**	**300**
f_2		0,24	0,24	0,24	0,24
a_2	mm	28,7	31,2	40,2	46,7
MK_{2zulL}	Nm	62	119	319	658
MK_{2zulW}	Nm	20	43	134	308
KL_2		255	312	848	1610
p_2		3,00	3,00	3,00	3,00

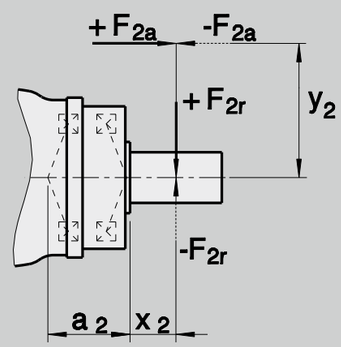

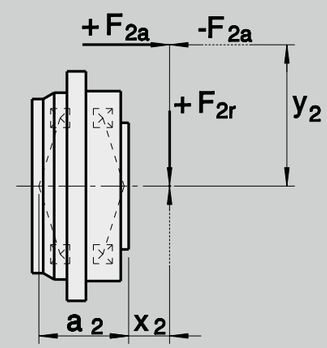

* Angular gearboxes, please contact us.

LOW BACKLASH PLANETARY GEARBOXES

The planetary gearbox consists of the coaxial sun gear, planet carrier and outer gear sub-assemblies, and is combined with the planet gears rotating at constant centres about the planet carrier. The input is from the sun gear. The drive motion to the planet carrier (output shaft) is via the planet gears. The rolling contact of the planet gears with the outer gear provides the appropriate ratio. Multi-stage gearboxes are available by connecting the individual stages in sequence. Within the gear assembly the individual stages are sized to their torque requirement.

MPR						
050	100	200	300	400	500	600
Page 25	Page 25	Page 26	Page 26	Page 27	Page 27	Page 28

MPG						
050	100	200	300	400	500	600
Page 39	Page 39	Page 40	Page 40	Page 41	Page 41	Page 42

MPL			
050	100	200	300
Page 51	Page 51	Page 52	Page 53

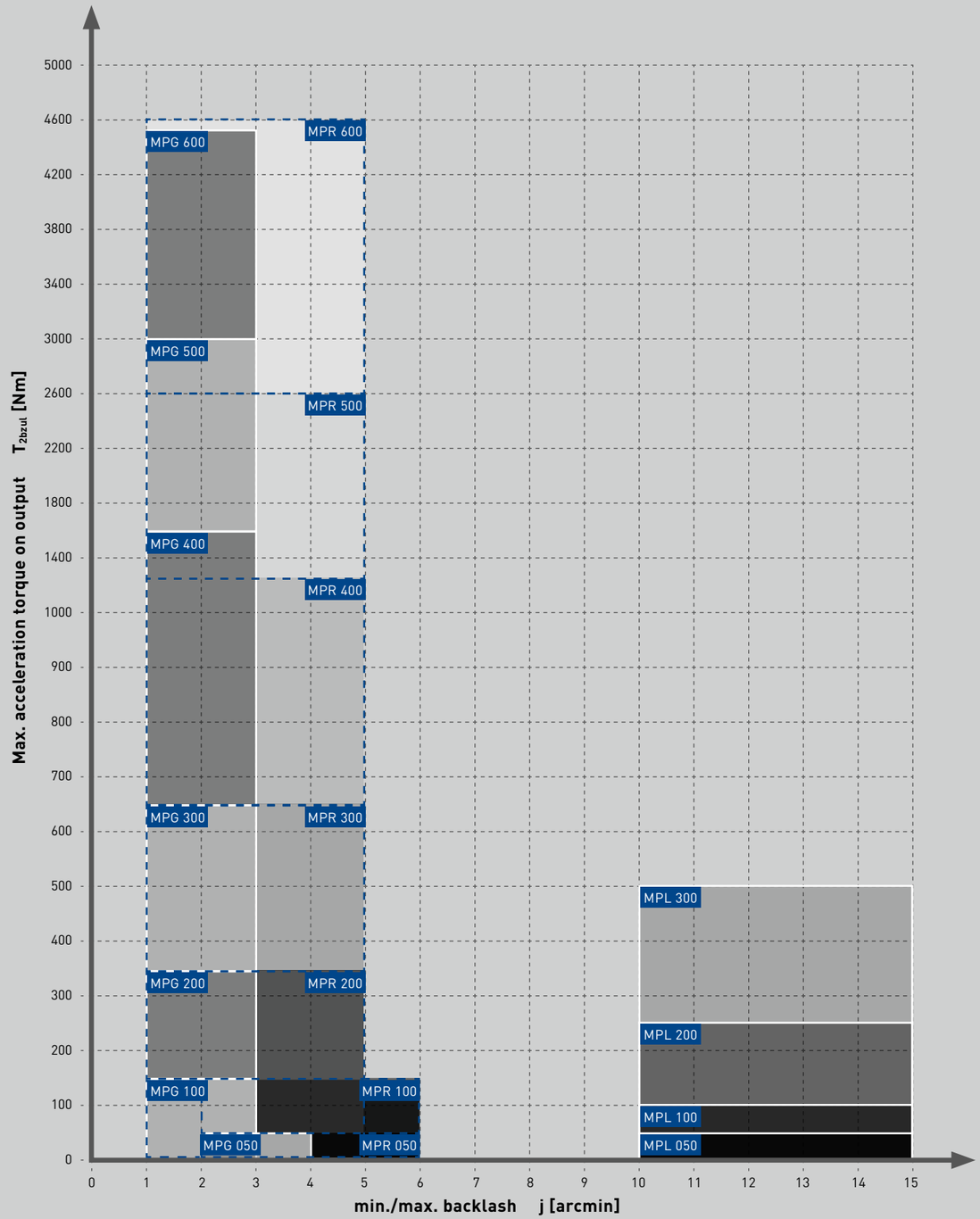

MPR(N)

TECHNICAL DATA

Technical specifications on this page and in the tables on the following three pages are intended only for rough preselection.

Gear teeth:	helical gear
Direction of rotation:	input and output in the same direction
Efficiency:	1-stage η ≥ 97 % 2-stage η ≥ 95 %
Life time:	20000 h
Permissible gearbox temperature at housing:	-10 °C to +90 °C
Lubrication:	lubricated for life
Mounting position:	any
Surface protection:	Primer coat RAL 9005 Black
Protection rating:	IP65

MPR(N) 050 – MPR(N) 100

TECHNICAL DATA

The following technical specifications in the table are intended only for rough preselection

MPR				050														
Gear stages				1					2									
Ratio		i		3	4	5	7	10	12	16	20	25	28	35	40	50	70	100
Max. acceleration torque (max. 1000 cycles per hour)		T_{2bzul}	Nm	32	44	44	44	35	32	44	44	44	44	44	44	44	44	35
Nominal torque on output (with n_{1Nzul})		T_{2Nzul}	Nm	20	29	29	29	19	20	29	29	29	29	29	29	29	29	19
Emergency stop torque (permissible 1000 times during gearbox life time)		$T_{2Notzul}$	Nm	80	110	110	107	88	80	110	110	110	110	110	110	110	107	88
Permissible average input speed (with T_{2Nzul} and 20 °C ambient temperature)		n_{1mzul}	min^{-1}	3300	3300	3300	3700	4000	4000	4400	4400	4400	4400	4400	4400	4800	5500	5500
Max. input speed		$n_{1maxzul}$	min^{-1}	6000					6000									
Max. backlash*		j	arcmin	standard ≤ 4 / reduced ≤ 2					standard ≤ 6 / reduced ≤ 4									
Torsional rigidity▲		C	Nm/arcmin	5					5									
Max. radial load** (with reference to shaft centre on output shaft)		F_{2rzul}	N	2700					2700									
Max. axial load** (with reference to shaft centre on output shaft)		F_{2azul}	N	2400					2400									
Weight		m	kg	2,1					2,7									
Running noise (with n_1 = 3000 min^{-1} without load)		L_{PA}	dB(A)	≤ 64					≤ 64									
Inertia (with reference to input)	Ø d 11	J_1	$kgcm^2$	0,33	0,24	0,20	0,18	0,16	0,21	0,21	0,18	0,18	0,17	0,17	0,16	0,16	0,16	0,16
	Ø d 14	J_1	$kgcm^2$	0,36	0,27	0,23	0,21	0,19	0,25	0,24	0,21	0,21	0,20	0,20	0,19	0,19	0,19	0,19
	Ø d 19	J_1	$kgcm^2$	0,53	0,44	0,40	0,34	0,33	-	-	-	-	-	-	-	-	-	-

MPR				100														
Gear stages				1					2									
Ratio		i		3	4	5	7	10	12	16	20	25	28	35	40	50	70	100
Max. acceleration torque (max. 1000 cycles per hour)		T_{2bzul}	Nm	90	120	120	120	90	90	120	120	120	120	120	120	120	120	90
Nominal torque on output (with n_{1Nzul})		T_{2Nzul}	Nm	56	83	83	83	58	56	83	83	83	83	83	76	83	83	58
Emergency stop torque (permissible 1000 times during gearbox life time)		$T_{2Notzul}$	Nm	200	275	275	275	220	200	275	275	275	275	275	275	275	275	220
Permissible average input speed (with T_{2Nzul} and 20 °C ambient temperature)		n_{1mzul}	min^{-1}	2800	2800	2800	2800	3100	3100	3500	3500	3500	3500	3500	3500	3800	4500	4500
Max. input speed		$n_{1maxzul}$	min^{-1}	6000					6000									
Max. backlash*		j	arcmin	standard ≤ 4 / reduced ≤ 2					standard ≤ 6 / reduced ≤ 4									
Torsional rigidity▲		C	Nm/arcmin	11					11									
Max. radial load** (with reference to shaft centre on output shaft)		F_{2rzul}	N	4000					4000									
Max. axial load** (with reference to shaft centre on output shaft)		F_{2azul}	N	3350					3350									
Weight		m	kg	3,1					4,4									
Running noise (with n_1 = 3000 min^{-1} without load)		L_{PA}	dB(A)	≤ 64					≤ 64									
Inertia (with reference to input)	Ø d 11	J_1	$kgcm^2$	1,03	0,70	0,58	0,48	0,43	0,25	0,23	0,19	0,19	0,17	0,17	0,16	0,16	0,16	0,16
	Ø d 14	J_1	$kgcm^2$	1,07	0,74	0,62	0,52	0,47	0,29	0,26	0,22	0,22	0,20	0,20	0,19	0,19	0,19	0,19
	Ø d 19	J_1	$kgcm^2$	1,21	0,88	0,76	0,67	0,62	-	-	-	-	-	-	-	-	-	-
	Ø d 24	J_1	$kgcm^2$	1,92	1,59	1,47	1,37	1,32	-	-	-	-	-	-	-	-	-	-

▲ with reference to output
* measured with 2 % nominal torque on output shaft
** charge centre of output shaft at output speed 250 min^{-1}. Please contact us for combined load applications

MPR(N) 200 – MPR(N) 300

TECHNICAL DATA

MPR				200															
Gear stages				1					2										
Ratio		i		3	4	5	7	10	12	16	20	25	28	35	40	50	70	100
Max. acceleration torque (max. 1000 cycles per hour)		T_{2bzul}	Nm	230	330	330	300	235	230	330	330	330	330	330	330	330	330	235
Nominal torque on output (with n_{1Nzul})		T_{2Nzul}	Nm	135	200	195	190	135	135	200	195	195	200	195	200	195	190	135
Emergency stop torque (permissible 1000 times during gearbox life time)		$T_{2Notzul}$	Nm	500	690	675	640	550	500	690	675	675	690	675	690	675	640	550
Permissible average input speed (with T_{2Nzul} and 20 °C ambient temperature)		n_{1mzul}	min^{-1}	2500	2500	2500	2800	2800	2800	3100	3100	3100	3100	3100	3100	3500	4200	4200
Max. input speed		$n_{1maxzul}$	min^{-1}	4500					4500									
Max. backlash*		j	arcmin	standard ≤ 3 / reduced ≤ 1					standard ≤ 5 / reduced ≤ 3									
Torsional rigidity▲		C	Nm/arcmin	30					30									
Max. radial load** (with reference to shaft centre on output shaft)		F_{2rzul}	N	6300					6300									
Max. axial load** (with reference to shaft centre on output shaft)		F_{2azul}	N	5650					5650									
Weight		m	kg	7,3					8,3									
Running noise (with n_1 = 3000 min^{-1} without load)		L_{PA}	dB(A)	≤ 66					≤ 64									
Inertia (with reference to input)	Ø d 11	J_1	$kgcm^2$	-	-	-	-	-	0,80	0,72	0,58	0,56	0,48	0,47	0,44	0,43	0,43	0,42
	Ø d 14	J_1	$kgcm^2$	-	-	-	-	-	0,84	0,76	0,61	0,60	0,52	0,51	0,47	0,46	0,46	0,46
	Ø d 19	J_1	$kgcm^2$	4,48	3,23	2,78	2,42	2,23	0,98	0,90	0,76	0,74	0,66	0,65	0,62	0,61	0,61	0,60
	Ø d 24	J_1	$kgcm^2$	5,00	3,75	3,30	2,94	2,75	-	-	-	-	-	-	-	-	-	-
	Ø d 28	J_1	$kgcm^2$	6,80	5,56	5,10	4,74	4,55	-	-	-	-	-	-	-	-	-	-
	Ø d 32	J_1	$kgcm^2$	7,09	5,84	5,39	5,02	4,83	-	-	-	-	-	-	-	-	-	-
	Ø d 38	J_1	$kgcm^2$	8,94	7,69	7,24	6,85	6,67	-	-	-	-	-	-	-	-	-	-

MPR				300															
Gear stages				1					2										
Ratio		i		3	4	5	7	10	12	16	20	25	28	35	40	50	70	100
Max. acceleration torque (max. 1000 cycles per hour)		T_{2bzul}	Nm	400	660	660	600	480	400	660	660	660	660	660	660	660	600	480
Nominal torque on output (with n_{1Nzul})		T_{2Nzul}	Nm	290	390	390	380	245	290	390	390	390	390	390	390	390	380	245
Emergency stop torque (permissible 1000 times during gearbox life time)		$T_{2Notzul}$	Nm	1000	1400	1400	1400	1100	1000	1400	1400	1400	1400	1400	1400	1400	1400	1100
Permissible average input speed (with T_{2Nzul} and 20 °C ambient temperature)		n_{1mzul}	min^{-1}	2100	2100	2100	2300	2600	2600	2900	2900	2900	2900	2900	2900	3200	3200	3900
Max. input speed		$n_{1maxzul}$	min^{-1}	4000					4000									
Max. backlash*		j	arcmin	standard ≤ 3 / reduced ≤ 1					standard ≤ 5 / reduced ≤ 3									
Torsional rigidity▲		C	Nm/arcmin	60					60									
Max. radial load** (with reference to shaft centre on output shaft)		F_{2rzul}	N	9450					9450									
Max. axial load** (with reference to shaft centre on output shaft)		F_{2azul}	N	9870					9870									
Weight		m	kg	17,3					19,0									
Running noise (with n_1 = 3000 min^{-1} without load)		L_{PA}	dB(A)	≤ 66					≤ 65									
Inertia (with reference to input)	Ø d 19	J_1	$kgcm^2$	-	-	-	-	-	2,70	2,46	2,26	2,20	2,14	2,12	2,11	2,08	2,07	2,06
	Ø d 24	J_1	$kgcm^2$	13,54	9,72	8,27	7,14	6,46	3,22	2,98	2,78	2,72	2,66	2,63	2,62	2,59	2,58	2,58
	Ø d 28	J_1	$kgcm^2$	15,30	11,49	10,04	8,89	8,22	5,02	4,78	4,58	4,53	4,46	4,43	4,42	4,39	4,38	4,38
	Ø d 32	J_1	$kgcm^2$	15,61	11,79	10,34	9,20	8,53	5,30	5,07	4,87	4,81	4,74	4,71	4,71	4,68	4,66	4,66
	Ø d 38	J_1	$kgcm^2$	16,59	12,78	11,33	10,16	9,48	7,16	6,92	6,72	6,66	6,58	6,55	6,54	6,51	6,50	6,49
	Ø d 42	J_1	$kgcm^2$	23,09	19,27	17,82	16,66	15,98	-	-	-	-	-	-	-	-	-	-
	Ø d 48	J_1	$kgcm^2$	25,47	21,65	20,20	19,04	18,37	-	-	-	-	-	-	-	-	-	-

▲ with reference to output
* measured with 2 % nominal torque on output shaft
** charge centre of output shaft at output speed 250 min^{-1}. Please contact us for combined load applications

MPR(N) 04 – MPR(N) 05

TECHNICAL DATA

MPR				400															
Gear stages				1					2										
Ratio		i		3	4	5	7	10	12	16	20	25	28	35	40	50	70	100
Max. acceleration torque (max. 1000 cycles per hour)		T_{2bzul}	Nm	1000	1250	1250	1250	900	1000	1250	1250	1250	1250	1250	1250	1250	1250	900
Nominal torque on output (with n_{1Nzul})		T_{2Nzul}	Nm	550	780	780	780	700	550	780	780	780	780	780	780	780	780	700
Emergency stop torque (permissible 1000 times during gearbox life time)		$T_{2Notzul}$	Nm	2200	2800	2800	2800	2200	2200	2800	2800	2800	2800	2800	2800	2800	2800	2200
Permissible average input speed (with T_{2Nzul} and 20 °C ambient temperature)		n_{1mzul}	min^{-1}	1500	1500	1500	2300	2300	2700	2700	2700	2700	2700	2700	2700	2900	3200	3400
Max. input speed		$n_{1maxzul}$	min^{-1}	3500					4000									
Max. backlash*		j	arcmin	standard ≤ 3 / reduced ≤ 1					standard ≤ 5 / reduced ≤ 3									
Torsional rigidity▲		C	Nm/arcmin	170					170									
Max. radial load** (with reference to shaft centre on output shaft)		F_{2rzul}	N	15500					15500									
Max. axial load** (with reference to shaft centre on output shaft)		F_{2azul}	N	14200					14200									
Weight		m	kg	44					43									
Running noise (with n_1 = 3000 min^{-1} without load)		L_{PA}	dB(A)	≤ 66					≤ 66									
Inertia (with reference to input)	Ø d 24	J_1	$kgcm^2$	–	–	–	–	–	10,96	9,72	8,28	8,01	7,14	7,00	6,64	6,46	6,41	6,38
	Ø d 28	J_1	$kgcm^2$	–	–	–	–	–	12,72	11,48	10,04	9,78	8,89	8,76	8,39	8,21	8,16	8,13
	Ø d 32	J_1	$kgcm^2$	–	–	–	–	–	13,03	11,79	10,35	10,08	9,20	9,07	8,70	8,52	8,47	8,44
	Ø d 38	J_1	$kgcm^2$	87,04	67,21	60,56	55,25	52,48	14,01	12,78	11,33	11,07	10,16	10,02	9,66	9,48	9,43	9,40
	Ø d 38	J_1	$kgcm^2$	86,67	66,84	60,19	54,88	52,11	–	–	–	–	–	–	–	–	–	–
	Ø d 48	J_1	$kgcm^2$	85,87	66,04	59,40	54,08	51,31	–	–	–	–	–	–	–	–	–	–
	Ø d 55	J_1	$kgcm^2$	84,48	64,65	58,01	52,69	49,92	–	–	–	–	–	–	–	–	–	–

MPR				500															
Gear stages				1					2										
Ratio		i		3	4	5	7	10	12	16	20	25	28	35	40	50	70	100
Max. acceleration torque (max. 1000 cycles per hour)		T_{2bzul}	Nm	1700	2600	2600	2200	1500	1700	2600	2600	2600	2600	2600	2600	2600	2200	1500
Nominal torque on output (with n_{1Nzul})		T_{2Nzul}	Nm	1200	1600	1600	1450	1000	1200	1600	1600	1600	1600	1600	1600	1600	1450	1000
Emergency stop torque (permissible 1000 times during gearbox life time)		$T_{2Notzul}$	Nm	5000	5200	5200	5200	5000	5000	5200	5200	5200	5200	5200	5200	5200	5200	5000
Permissible average input speed (with T_{2Nzul} and 20 °C ambient temperature)		n_{1mzul}	min^{-1}	1200	1200	1500	1700	2000	2000	2500	2500	2500	2500	2500	2500	2500	3000	3000
Max. input speed		$n_{1maxzul}$	min^{-1}	2500					3500									
Max. backlash*		j	arcmin	standard ≤ 3 / reduced ≤ 1					standard ≤ 5 / reduced ≤ 3									
Torsional rigidity▲		C	Nm/arcmin	400					400									
Max. radial load** (with reference to shaft centre on output shaft)		F_{2rzul}	N	21000					21000									
Max. axial load** (with reference to shaft centre on output shaft)		F_{2azul}	N	30000					30000									
Weight		m	kg	58					73									
Running noise (with n_1 = 2000 min^{-1} without load)		L_{PA}	dB(A)	≤ 64					≤ 64									
Inertia (with reference to input)	Ø d 38	J_1	$kgcm^2$	139,42	91,74	75,81	66,76	60,00	70,58	67,60	60,71	60,07	55,35	55,02	52,77	52,37	52,24	52,17
	Ø d 42	J_1	$kgcm^2$	139,05	91,37	75,44	66,38	59,63	70,21	67,23	60,34	59,70	54,97	54,65	52,40	52,00	51,87	51,80
	Ø d 48	J_1	$kgcm^2$	138,25	90,57	74,64	65,59	58,83	69,41	66,43	59,54	58,91	54,18	53,85	51,60	51,20	51,07	51,00
	Ø d 55	J_1	$kgcm^2$	136,86	89,18	73,25	64,20	57,44	68,02	65,04	58,15	57,51	52,79	52,46	50,21	49,81	49,68	49,61

▲ with reference to output
* measured with 2 % nominal torque on output shaft
** charge centre of output shaft at output speed 250 min^{-1}. Please contact us for combined load applications

MPR(N) 600

TECHNICAL DATA

MPR																		
										600								
Gear stages					1					2								
Ratio	i		3	4	5	7	10	12	16	20	25	28	35	40	50	70	100
Max. acceleration torque (max. 1000 cycles per hour)	T_{2bzul}	Nm	2800	4600	4500	3400	2300	2800	4600	4600	4500	4600	4500	3600	4500	3400	2300
Nominal torque on output (with n_{1Nzul})	T_{2Nzul}	Nm	1550	2600	2600	2400	1600	1550	2600	2600	2600	2600	2600	2600	2600	2400	1600
Emergency stop torque (permissible 1000 times during gearbox life time)	$T_{2Notzul}$	Nm	6800	8500	8500	8500	6800	6800	8500	8500	8500	8500	8500	8500	8500	8500	6800
Permissible average input speed (with T_{2Nzul} and 20 °C ambient temperature)	n_{1mzul}	min^{-1}	1000	1000	1200	1500	1700	2000	2300	2500	2500	2500	2500	2500	2500	2800	2800
Max. input speed	$n_{1maxzul}$	min^{-1}			2500							3500					
Max. backlash*	j	arcmin		standard ≤ 3 / reduced ≤ 1							standard ≤ 5 / reduced ≤ 3						
Torsional rigidity▲	C	Nm/arcmin			550							550					
Max. radial load** (with reference to shaft centre on output shaft)	F_{2rzul}	N			30000							30000					
Max. axial load** (with reference to shaft centre on output shaft)	F_{2azul}	N			33000							33000					
Weight	m	kg			80							94					
Running noise (with n_1 = 2000 min^{-1} without load)	L_{PA}	dB(A)			≤ 66							≤ 66					
Inertia (with reference to input) Ø d 38	J_1	$kgcm^2$	266,99	182,39	154,28	131,79	119,83	78,46	73,17	63,53	62,40	56,36	55,79	53,44	52,70	52,48	52,36
Ø d 42	J_1	$kgcm^2$	268,38	183,78	155,67	133,19	121,22	78,09	72,80	63,16	62,03	55,99	55,42	53,06	52,33	52,11	51,99
Ø d 48	J_1	$kgcm^2$	269,18	184,58	156,46	133,98	122,01	77,29	72,00	62,36	61,24	55,20	54,62	52,27	51,53	51,31	51,19
Ø d 55	J_1	$kgcm^2$	269,55	184,95	156,84	134,35	122,38	75,90	70,61	60,97	59,85	53,80	53,23	50,88	50,14	49,92	49,80
Ø d 60	J_1	$kgcm^2$	265,61	181,01	152,90	130,42	118,45	–	–	–	–	–	–	–	–	–	–

▲ with reference to output
* measured with 2 % nominal torque on output shaft
** charge centre of output shaft at output speed 250 min^{-1}. Please contact us for combined load applications

MPR(N) 050 – MPR(N) 600

DIMENSIONS 1-STAGE

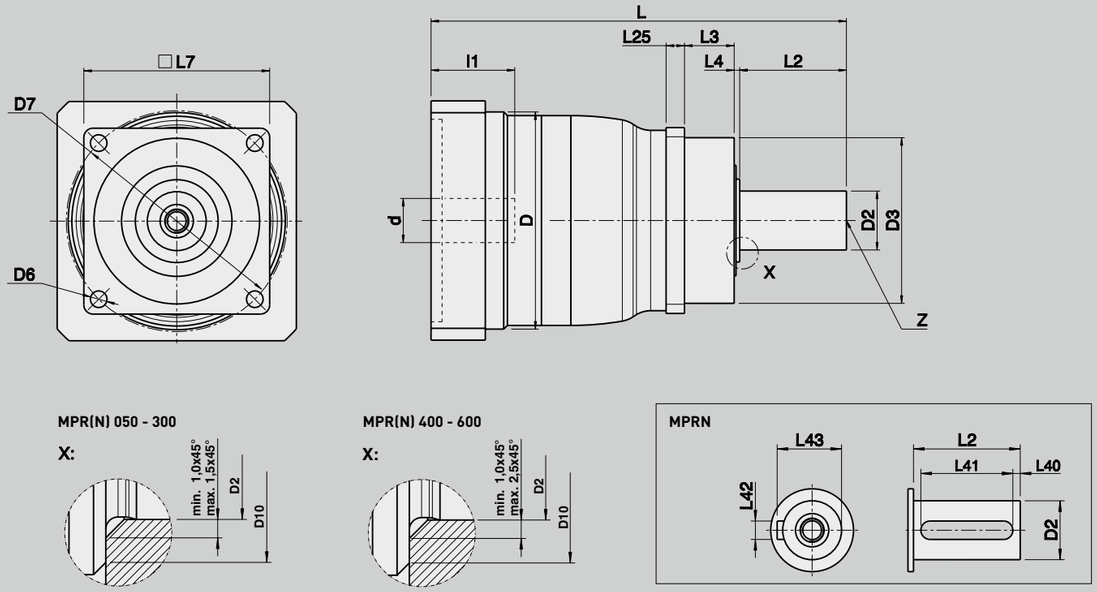

MPRN = with keyway

d	x	l1	Size	Ratio	D	D2	x	L2	D3	D6	D7	D10	L	L3	L4	L7	L25	Z DIN 332	L40	L41	L42	L43
F7						k6			g6												h9	
11	x	23	**050**	3 - 10	72	16	x	28	60	5,5	68	22	137,0	18,0	2	62	6	D M5	2	25	5	18,0
14	x	30																				
19	x	40											146,0									
11	x	23	**100**	3 - 10	94	22	x	36	70	6,6	85	27	168,5	17,5	2,5	76	7	D M8	2	32	6	24,5
14	x	30																				
19	x	40																				
24	x	50											178,5									
19	x	40	**200**	3 - 10	120	32	x	58	90	9,0	120	42	225,8	27,0	3	101	10	D M12	4	50	10	35,0
24	x	50																				
28	x	60																				
32	x	60																				
38	x	80											250,8									
24	x	50	**300**	3 - 10	154	40	x	82	130	11,0	165	61	295,5	27,0	3	141	12	D M16	5	70	12	43,0
28	x	60																				
32	x	60																				
38	x	80																				
42	x	110											329,5									
48	x	110																				
38	x	80	**400**	3 - 10	210	55	x	82	160	13,5	215	77	367,0	27	3	182	15	D M20	6	70	16	59,0
42	x	110																				
48	x	110																				
55	x	110																				
38	x	80	**500**	3 - 10	227	75	x	105	180	17,0	250	102	410,0	35	3	215	17	D M20	7	90	20	79,5
42	x	110																				
48	x	110																				
55	x	110																				
38	x	80	**600**	3 - 10	255	85	x	130	200	17,0	290	107	460,5	37	3	245	20	D M20	10	110	22	90,0
42	x	110																				
48	x	110																				
55	x	110																				
60	x	110																				

MPR(N) 050 – MPR(N) 600

DIMENSIONS 2-STAGE

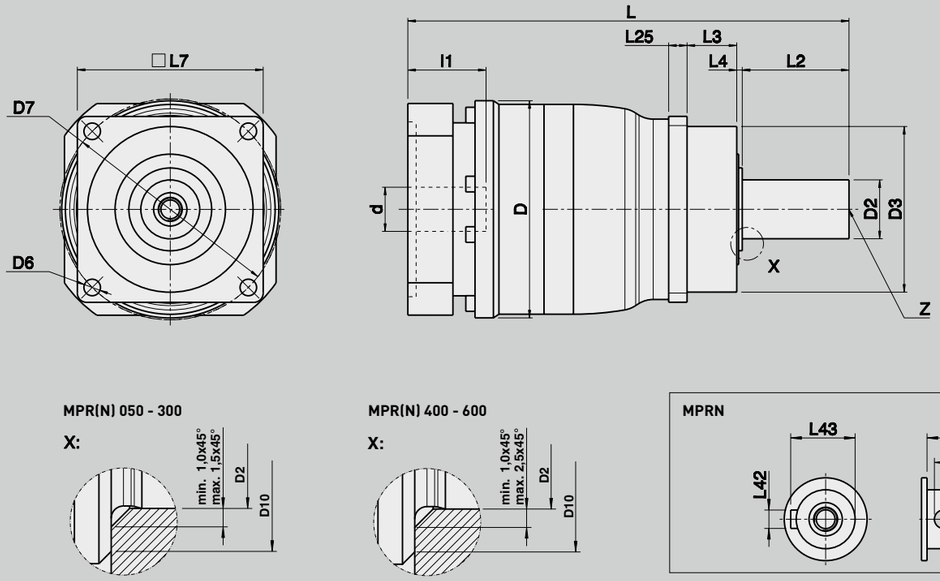

MPRN = with keyway

d	x	l1	Size	Ratio	D	D2	x	L2	D3	D6	D7	D10	L	L3	L4	L7	L25	Z DIN 332	L40	L41	L42	L43
F7						k6			g6												h9	
11	x	23	**050**	12 - 100	72	16	x	28	60	5,5	68	22	165,5	18,0	2	62	6	D M5	2	25	5	18,0
14	x	30																				
11	x	23	**100**	12 - 100	94	22	x	36	70	6,6	85	27	188,5	17,5	2,5	76	7	D M8	2	32	6	24,5
14	x	30																				
11	x	23	**200**	12 - 100	120	32	x	58	90	9,0	120	42	239,8	27,0	3	101	10	D M12	4	50	10	35,0
14	x	30																				
19	x	40																				
19	x	40	**300**	12 - 100	152	40	x	82	130	11,0	165	61	314,0	27,0	3	141	12	D M16	5	70	12	43,0
24	x	50																				
28	x	60																				
32	x	60																				
24	x	50	**400**	12 - 100	210	55	x	82	160	13,5	215	77	383,0	27	3	182	15	D M20	6	70	16	59,0
28	x	60																				
32	x	60																				
38	x	80																				
38	x	80	**500**	12 - 100	227	75	x	105	180	17,0	250	102	486,0	35	3	215	17	D M20	7	90	20	79,5
42	x	110																				
48	x	110																				
55	x	110																				
38	x	80	**600**	12 - 100	255	85	x	130	200	17,0	290	107	534,5	37	3	245	20	D M20	10	110	22	90,0
42	x	110																				
48	x	110																				
55	x	110																				

MPRW 050 – MPRW 600

DIMENSIONS 1-STAGE

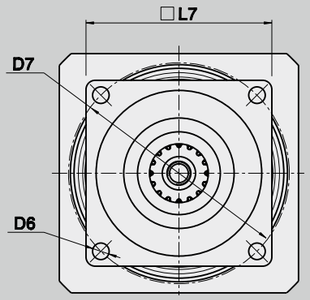

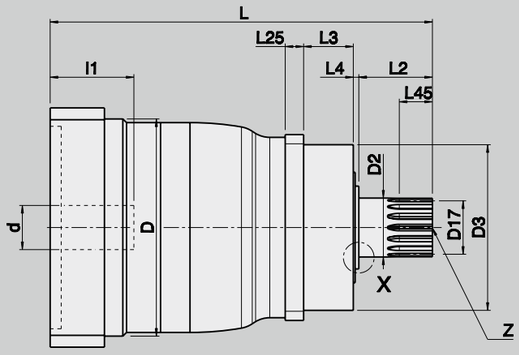

MPRW 050

X:

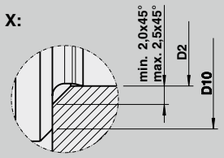

MPRW 100 - 300

X:

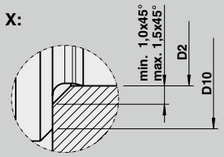

MPRW 400 - 600

X:

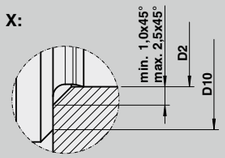

d	x	l1	Size	Ratio	D	D2	x	L2	D3	D6	D7	D10	D 17 DIN 5480	L	L3	L4	L7	L25	L45	Z DIN 332
F7						k6			g6											
11	x	23	**050**	3 - 10	72	16	x	26	60	5,5	68	22	W 16 x 0,8 x 30 x 18 x 6 m	135,0	18,0	2	62	6	15	D M5
14	x	30																		
19	x	40												144,0						
11	x	23	**100**	3 - 10	94	22	x	26	70	6,6	85	27	W 22 x 1,25 x 30 x 16 x 6 m	158,5	17,5	2,5	76	7	15	D M8
14	x	30																		
19	x	40																		
24	x	50												168,5						
19	x	40	**200**	3 - 10	120	32	x	26	90	9,0	120	42	W 32 x 1,25 x 30 x 24 x 6 m	193,8	27,0	3	101	10	15	D M12
24	x	50																		
28	x	60																		
32	x	60																		
38	x	80												218,8						
24	x	50	**300**	3 - 10	154	40	x	40	130	11,0	165	61	W 40 x 2 x 30 x 18 x 6 m	253,5	27,0	3	141	12	20	D M16
28	x	60																		
32	x	60																		
38	x	80																		
42	x	110												287,5						
48	x	110																		
38	x	80	**400**	3 - 10	210	55	x	41,5	160	13,5	215	77	W 55 x 2 x 30 x 26 x 6 m	326,5	27	3	182	15	21,5	D M20
42	x	110																		
48	x	110																		
55	x	110																		
38	x	80	**500**	3 - 10	227	75	x	52,0	180	17,0	250	102	W 70 x 2 x 30 x 34 x 6 m	357,0	35	3	215	17	28	D M20
42	x	110																		
48	x	110																		
55	x	110																		
38	x	80	**600**	3 - 10	255	85	x	60,0	200	17,0	290	107	W 80 x 2 x 30 x 38 x 6 m	390,5	37	3	245	20	36	D M20
42	x	110																		
48	x	110																		
55	x	110																		
60	x	110																		

MPRW 050 – MPRW 600

DIMENSIONS 2-STAGE

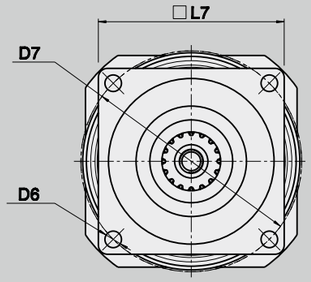

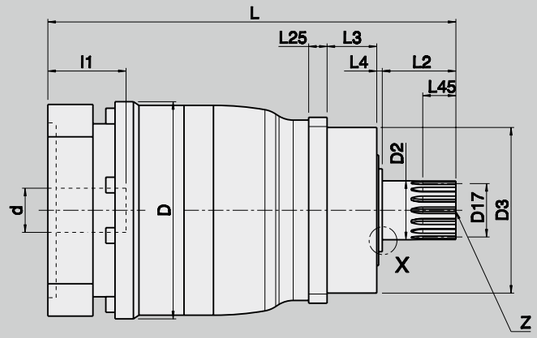

MPRW 050

X:

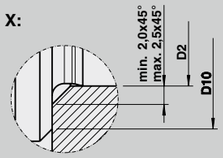

MPRW 100 - 300

X:

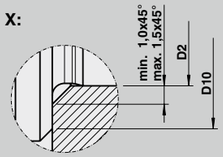

MPRW 400 - 600

X:

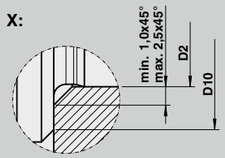

d	x	l1	Size	Ratio	D	D2	x	L2	D3	D6	D7	D10	D 17 DIN 5480	L	L3	L4	L7	L25	L45	Z DIN 332
F7						k6			g6											
11	x	23	**050**	12 - 100	72	16	x	26	60	5,5	68	22	W 16 x 0,8 x 30 x 18 x 6 m	163,5	18,0	2	62	6	15	D M5
14	x	30																		
11	x	23	**100**	12 - 100	94	22	x	26	70	6,6	85	27	W 22 x 1,25 x 30 x 16 x 6 m	178,5	17,5	2,5	76	7	15	D M8
14	x	30																		
11	x	23	**200**	12 - 100	120	32	x	26	90	9,0	120	42	W 32 x 1,25 x 30 x 24 x 6 m	207,8	27,0	3	101	10	15	D M12
14	x	30																		
19	x	40																		
19	x	40	**300**	12 - 100	152	40	x	40	130	11,0	165	61	W 40 x 2 x 30 x 18 x 6 m	272,0	27,0	3	141	12	20	D M16
24	x	50																		
28	x	60																		
32	x	60																		
24	x	50	**400**	12 - 100	210	55	x	41,5	160	13,5	215	77	W 55 x 2 x 30 x 26 x 6 m	342,5	27	3	182	15	21,5	D M20
28	x	60																		
32	x	60																		
38	x	80																		
38	x	80	**500**	12 - 100	227	75	x	52,0	180	17,0	250	102	W 70 x 2 x 30 x 34 x 6 m	433,0	35	3	215	17	28	D M20
42	x	110																		
48	x	110																		
55	x	110																		
38	x	80	**600**	12 - 100	255	85	x	60,0	200	17,0	290	107	W 80 x 2 x 30 x 38 x 6 m	464,5	37	3	245	20	36	D M20
42	x	110																		
48	x	110																		
55	x	110																		

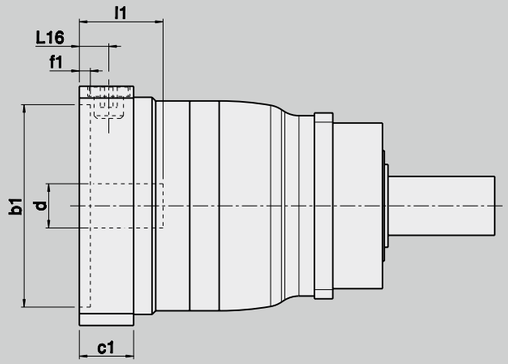

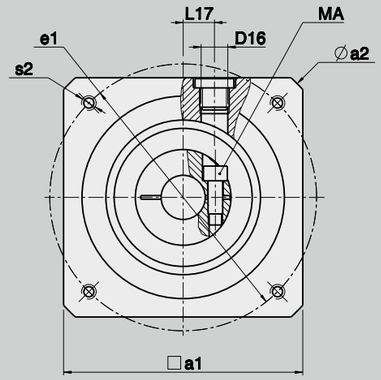

		Motor dimensions																									
a1		75	75	75	95	95	75	75	95	75	95	95	95	120	115	120	120	130	130	150	140	150	160	150	160	200	250	260
a2		90	90	90	120	120	90	90	120	102	120	120	120	140	140	140	160	160	160	186	190	186	190	186	190	250	300	350
b1	G8	40	40	50	50	50	60	60	60	60	70	70	80	80	95	95	95	110	110	110	110	110	110	130	130	180	230	250
e1		63	63	70	70	95	75	75	75	90	85	90	100	100	115	115	130	130	130	130	145	145	165	165	165	215	265	300
s2		M4 x8	M5 x10	M5 x10	M5 x10	M6 x12	M5 x10	M6 x12	M6 x12	M5 x10	M6 x12	M6 x12	M6 x12	M6 x12	M8 x16	M8 x16	M8 x16	M8 x16	M8 x16	M8 x16	M8 x16	M8 x16	M10 x20	M10 x20	M10 x20	M12 x24	M12 x24	M16 x32
		-	-	-	-	-	-	-	-	-	Ø 7,0	-	-	-	-	-	-	Ø 9,0	-	-	-	-	-	-	Ø 11,0	-	-	-

Gearbox dimensions																																			
d	x	l1	Size	L16	L17	c1	f1	D16	Screw type	MA																									
F7										[Nm]																									
11	x	23			10				M5 / 12.9	9		x	x	x			x	x		x															
14	x	30	**050**	10,5	10 - 12	18,5	4,5	M10x1	M5 / 12.9	9		x	x	x			x	x		x	x		x		x										
19	x	40			12 - 16				M6 / 12.9	16													x		x			x							
11	x	23			10				M5 / 12.9	9					x	x			x																
14	x	30	**100**	13,5	10 - 12	24,5	4,5	M12x1,5	M5 / 12.9	9					x	x			x			x	x		x										
19	x	40			12 - 16				M6 / 12.9	16													x		x			x							
24	x	50			16 - 21				M8 / 12.9	40																		x							
19	x	40			12 - 16				M6 / 12.9	16														x		x	x		x		x		x		
24	x	50			16 - 21				M8 / 12.9	40																			x		x		x		
28	x	60	**200**	16,0	21 - 24	29,5	6,0	M16x1,5	M10 / 12.9	80																								x	x
32	x	60			21 - 24				M10 / 12.9	80																								x	x
38	x	80			24 - 26				M10 / 12.9	80																									x
24	x	50			16 - 21				M8 / 12.9	40																				x		x		x	
28	x	60			21 - 24				M10 / 12.9	80																								x	
32	x	60	**300**	20,5	21 - 24	36,5	6,0	M20x1,5	M10 / 12.9	80																								x	
38	x	80			24 - 26				M10 / 12.9	80																								x	x
42	x	110			26				M12 / 12.9	135																									x
48	x	110			26				M12 / 12.9	135																									x
38	x	80																																x	x
42	x	110	**400**	28,0	42	59,0	8,0	M22x1,5	M12 / 12.9	135																								x	x
48	x	110																																x	x
55	x	110																																x	x
38	x	80																																x	x
42	x	110	**500**	28,0	42	59,0	8,0	M22x1,5	M12 / 12.9	135																								x	x
48	x	110																																x	x
55	x	110																																x	x
38	x	80																																x	x
42	x	110																																x	x
48	x	110	**600**	28,0	42	59,0	8,0	M22x1,5	M16 / 12.9	330																								x	x
55	x	110																																x	x
60	x	110																																x	x

MPR(N) 050 – MPR(N) 600

DIMENSIONS MOTOR MOUNTING 2-STAGE

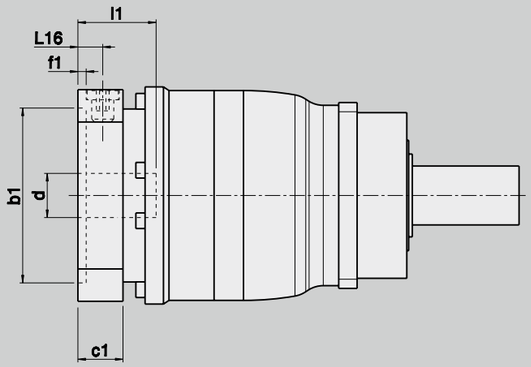

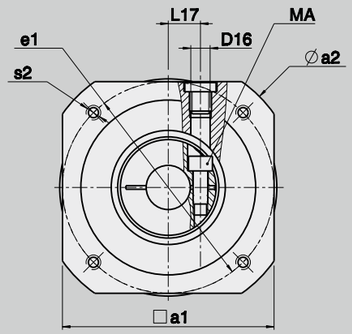

Motor dimensions																												
a1		75	75	75	95	95	75	75	95	75	95	95	95	120	115	120	120	130	130	150	140	150	160	150	160	200	250	260
a2		90	90	90	120	120	90	90	120	102	120	120	120	140	140	140	160	160	160	186	190	186	190	186	190	250	300	350
b1	G8	40	40	50	50	50	60	60	60	60	70	70	80	80	95	95	95	110	110	110	110	110	110	130	130	180	230	250
e1		63	63	70	70	95	75	75	75	90	85	90	100	100	115	115	130	130	130	130	145	145	165	165	165	215	265	300
s2		M4 x8	M5 x10	M5 x10	M5 x10	M6 x12	M5 x10	M6 x12	M6 x12	M5 x10	M6 x12	M6 x12	M6 x12	M6 x12	M8 x16	M8 x16	M8 x16	M8 x16	M8 x16	M8 x16	M8 x16	M8 x16	M10 x20	M10 x20	M10 x20	M12 x24	M12 x24	M16 x32
		-	-	-	-	-	-	-	-	-	Ø 7,0	-	-	-	-	-	-	Ø 9,0	-	-	-	-	-	-	Ø 11,0	-	-	-

Gearbox dimensions																																								
d F7	x	l1	Size	L16	L17	c1	f1	D16	Screw type	MA [Nm]																														
11	x	23	**050**	10,5	10	18,5	4,5	M10x1	M5 / 12.9	9			x	x	x			x	x		x																		
14	x	30			10 - 12	18,5			M5 / 12.9	9			x	x	x			x	x		x	x		x		x													
11	x	23	**100**	10,5	10	18,5	4,5	M10x1	M5 / 12.9	9			x	x	x			x	x		x																		
14	x	30			10 - 12	18,5			M5 / 12.9	9			x	x	x			x	x		x	x		x		x													
11	x	23	**200**	13,5	10	24,5	4,5	M12x1,5	M5 / 12.9	9						x	x			x																			
14	x	30			10 - 12	24,5			M5 / 12.9	9						x	x			x			x	x		x													
19	x	40			12 - 16	24,5			M6 / 12.9	16														x					x										
19	x	40	**300**	16,0	12 - 16	29,5	6,0	M16x1,5	M6 / 12.9	16															x		x	x		x		x		x					
24	x	50			16 - 21	29,5			M8 / 12.9	40																				x		x		x		x			
28	x	60			21 - 24	29,5			M10 / 12.9	80																										x	x		
32	x	60			16 - 24	29,5			M10 / 12.9	80																										x	x		
24	x	50	**400**	20,5	16 - 21	36,5	6,0	M20x1,5	M8 / 12.9	40																					x		x		x				
28	x	60			21 - 24	36,5			M10 / 12.9	80																									x		x		
32	x	60			21 - 24	36,5			M10 / 12.9	80																									x		x		
38	x	80			24 - 26	36,5			M10 / 12.9	80																											x	x	
38	x	80	**500**	28,0	42	59,0	8,0	M22x1,5	M12 / 12.9	135																											x	x	x
42	x	110																																			x	x	x
48	x	110																																			x	x	x
55	x	110																																			x	x	x
38	x	80	**600**	28,0	42	59,0	8,0	M22x1,5	M12 / 12.9	135																											x	x	x
42	x	110																																			x	x	x
48	x	110																																			x	x	x
55	x	110																																			x	x	x

MPG
TECHNICAL DATA

Technical specifications on this page and in the tables on the following three pages are intended only for rough preselection.

Gear teeth:	helical gear
Direction of rotation:	input and output in the same direction
Efficiency:	1-stage η ≥ 97 % 2-stage η ≥ 95 %
Life time:	20000 h
Permissible gearbox temperature at housing:	-10 °C to +90 °C
Lubrication:	lubricated for life
Mounting position:	any
Surface protection:	primer coat RAL 9005 Black
Protection rating:	IP65

MPG 050 – MPG 100
TECHNICAL DATA

The following technical specifications in the table are intended only for rough preselection

MPG				050												
Gear stages				1				2								
Ratio		i		4	5	7	10	16	20	25	28	35	40	50	70	100
Max. acceleration torque (max. 1000 cycles per hour)		T_{2bzul}	Nm	44	44	44	35	44	44	44	44	44	44	44	44	35
Nominal torque on output (with n_{1Nzul})		T_{2Nzul}	Nm	29	29	29	19	29	29	29	29	29	29	29	29	19
Emergency stop torque (permissible 1000 times during gearbox life time)		$T_{2Notzul}$	Nm	110	110	107	88	110	110	110	110	110	110	110	107	88
Permissible average input speed (with T_{2Nzul} and 20 °C ambient temperature)		n_{1mzul}	min^{-1}	3300	3300	3700	4000	4400	4400	4400	4400	4400	4400	4800	5500	5500
Max. input speed		$n_{1maxzul}$	min^{-1}	6000				6000								
Max. backlash*		j	arcmin	standard ≤ 4 / reduced ≤ 2				standard ≤ 4 / reduced ≤ 2								
Torsional rigidity▲		C	Nm/arcmin	12				12								
Max. axial load** (with reference to shaft centre on output shaft)		F_{2azul}	N	2200				2200								
Weight		m	kg	1,5				2,1								
Running noise (with n_1 = 3000 min^{-1} without load)		L_{PA}	dB(A)	≤ 64				≤ 64								
Inertia (with reference to input)	Ø d 11	J_1	$kgcm^2$	0,24	0,20	0,18	0,16	0,21	0,18	0,18	0,17	0,17	0,16	0,16	0,16	0,16
	Ø d 14	J_1	$kgcm^2$	0,27	0,23	0,21	0,19	0,24	0,21	0,21	0,20	0,20	0,19	0,19	0,19	0,19
	Ø d 19	J_1	$kgcm^2$	0,44	0,40	0,34	0,33	-	-	-	-	-	-	-	-	-

MPG				100												
Gear stages				1				2								
Ratio		i		4	5	7	10	16	20	25	28	35	40	50	70	100
Max. acceleration torque (max. 1000 cycles per hour)		T_{2bzul}	Nm	120	120	120	90	120	120	120	120	120	120	120	120	90
Nominal torque on output (with n_{1Nzul})		T_{2Nzul}	Nm	83	83	83	58	83	83	83	83	83	76	83	83	58
Emergency stop torque (permissible 1000 times during gearbox life time)		$T_{2Notzul}$	Nm	275	275	275	220	275	275	275	275	275	275	275	275	220
Permissible average input speed (with T_{2Nzul} and 20 °C ambient temperature)		n_{1mzul}	min^{-1}	2800	2800	2800	3100	3500	3500	3500	3500	3500	3500	3800	4500	4500
Max. input speed		$n_{1maxzul}$	min^{-1}	6000				6000								
Max. backlash*		j	arcmin	standard ≤ 3 / reduced ≤ 1				standard ≤ 3 / reduced ≤ 1								
Torsional rigidity▲		C	Nm/arcmin	33				33								
Max. axial load** (with reference to shaft centre on output shaft)		F_{2azul}	N	3600				3600								
Weight		m	kg	3,9				4,3								
Running noise (with n_1 = 3000 min^{-1} without load)		L_{PA}	dB(A)	≤ 64				≤ 64								
Inertia (with reference to input)	Ø d 11	J_1	$kgcm^2$	0,86	0,68	0,54	0,46	0,24	0,20	0,19	0,17	0,17	0,16	0,16	0,16	0,16
	Ø d 14	J_1	$kgcm^2$	0,90	0,72	0,57	0,50	0,27	0,23	0,22	0,21	0,20	0,19	0,19	0,19	0,19
	Ø d 19	J_1	$kgcm^2$	1,04	0,87	0,72	0,64	-	-	-	-	-	-	-	-	-
	Ø d 24	J_1	$kgcm^2$	1,75	1,57	1,42	1,35	-	-	-	-	-	-	-	-	-

▲ with reference to output
* measured with 2 % nominal torque on output shaft
** charge centre of output shaft at output speed 250 min^{-1}. Please contact us for combined load applications

MPG 200 – MPG 300

TECHNICAL DATA

MPG				200													
Gear stages				1				2									
Ratio		i		4	5	7	10	16	20	25	28	35	40	50	70	100
Max. acceleration torque (max. 1000 cycles per hour)		T_{2bzul}	Nm	330	330	300	235	330	330	330	330	330	330	330	330	235
Nominal torque on output (with n_{1Nzul})		T_{2Nzul}	Nm	200	195	190	135	200	195	195	200	195	200	195	190	135
Emergency stop torque (permissible 1000 times during gearbox life time)		$T_{2Notzul}$	Nm	690	675	640	550	690	675	675	690	675	690	675	640	550
Permissible average input speed (with T_{2Nzul} and 20 °C ambient temperature)		n_{1mzul}	min^{-1}	2500	2500	2800	2800	3100	3100	3100	3100	3100	3100	3500	4200	4200
Max. input speed		$n_{1maxzul}$	min^{-1}	4500				4500								
Max. backlash*		j	arcmin	standard ≤ 3 / reduced ≤ 1				standard ≤ 3 / reduced ≤ 1								
Torsional rigidity▲		C	Nm/arcmin	85				75								
Max. axial load** (with reference to shaft centre on output shaft)		F_{2azul}	N	4200				4200								
Weight		m	kg	6,6				7,0								
Running noise (with n_1 = 3000 min^{-1} without load)		L_{PA}	dB(A)	≤ 66				≤ 64								
Inertia (with reference to input)	Ø d 11	J_1	$kgcm^2$	-	-	-	-	0,74	0,59	0,57	0,49	0,48	0,44	0,43	0,43	0,42
	Ø d 14	J_1	$kgcm^2$	-	-	-	-	0,78	0,62	0,60	0,52	0,51	0,47	0,47	0,46	0,46
	Ø d 19	J_1	$kgcm^2$	3,48	2,94	2,50	2,27	0,92	0,77	0,75	0,67	0,66	0,62	0,61	0,61	0,60
	Ø d 24	J_1	$kgcm^2$	4,00	3,46	3,02	2,79	-	-	-	-	-	-	-	-	-
	Ø d 28	J_1	$kgcm^2$	5,81	5,27	4,82	4,59	-	-	-	-	-	-	-	-	-
	Ø d 32	J_1	$kgcm^2$	6,09	5,55	5,10	4,87	-	-	-	-	-	-	-	-	-
	Ø d 38	J_1	$kgcm^2$	7,94	7,40	6,94	6,71	-	-	-	-	-	-	-	-	-

MPG				300												
Gear stages				1				2								
Ratio		i		4	5	7	10	16	20	25	28	35	40	50	70	100
Max. acceleration torque (max. 1000 cycles per hour)		T_{2bzul}	Nm	660	660	600	480	660	660	660	660	660	660	660	600	480
Nominal torque on output (with n_{1Nzul})		T_{2Nzul}	Nm	390	390	380	245	390	390	390	390	390	390	390	380	245
Emergency stop torque (permissible 1000 times during gearbox life time)		$T_{2Notzul}$	Nm	1400	1400	1400	1100	1400	1400	1400	1400	1400	1400	1400	1400	1100
Permissible average input speed (with T_{2Nzul} and 20 °C ambient temperature)		n_{1mzul}	min^{-1}	2100	2100	2300	2600	2900	2900	2900	2900	2900	2900	3200	3200	3900
Max. input speed		$n_{1maxzul}$	min^{-1}	4000				4000								
Max. backlash*		j	arcmin	standard ≤ 3 / reduced ≤ 1				standard ≤ 3 / reduced ≤ 1								
Torsional rigidity▲		C	Nm/arcmin	180				170								
Max. axial load** (with reference to shaft centre on output shaft)		F_{2azul}	N	8000				8000								
Weight		m	kg	13,5				14,4								
Running noise (with n_1 = 3000 min^{-1} without load)		L_{PA}	dB(A)	≤ 66				≤ 65								
Inertia (with reference to input)	Ø d 19	J_1	$kgcm^2$	-	-	-	-	3,19	2,75	2,68	2,41	2,37	2,23	2,21	2,19	2,19
	Ø d 24	J_1	$kgcm^2$	10,81	8,98	7,50	6,70	3,71	3,28	3,20	2,93	2,89	2,74	2,72	2,71	2,70
	Ø d 28	J_1	$kgcm^2$	12,58	10,75	9,26	8,46	5,52	5,08	5,01	4,72	4,69	4,54	4,52	4,51	4,50
	Ø d 32	J_1	$kgcm^2$	12,89	11,06	9,57	8,77	5,80	5,36	5,29	5,01	4,97	4,83	4,81	4,79	4,78
	Ø d 38	J_1	$kgcm^2$	13,87	12,04	10,52	9,72	7,65	7,22	7,14	6,84	6,81	6,66	6,64	6,63	6,62
	Ø d 42	J_1	$kgcm^2$	20,36	18,53	17,02	16,22	-	-	-	-	-	-	-	-	-
	Ø d 48	J_1	$kgcm^2$	22,75	20,92	19,41	18,61	-	-	-	-	-	-	-	-	-

▲ with reference to output
* measured with 2 % nominal torque on output shaft
** charge centre of output shaft at output speed 250 min^{-1}. Please contact us for combined load applications

MPG 400 – MPG 500

TECHNICAL DATA

MPG				400												
Gear stages				1				2								
Ratio		i		4	5	7	10	16	20	25	28	35	40	50	70	100
Max. acceleration torque (max. 1000 cycles per hour)		T_{2bzul}	Nm	1650	1650	1250	900	1500	1650	1650	1650	1650	1650	1650	1250	900
Nominal torque on output (with n_{1Nzul})		T_{2Nzul}	Nm	700	780	780	700	1000	700	780	700	780	700	780	780	700
Emergency stop torque (permissible 1000 times during gearbox life time)		$T_{2Notzul}$	Nm	2800	2800	2800	2200	2800	2800	2800	2800	2800	2800	2800	2800	2200
Permissible average input speed (with T_{2Nzul} and 20 °C ambient temperature)		n_{1mzul}	min^{-1}	1400	1500	2000	2000	2500	2500	2500	2500	2500	2500	2900	3200	3400
Max. input speed		$n_{1maxzul}$	min^{-1}	3500				4000								
Max. backlash*		j	arcmin	standard ≤ 3 / reduced ≤ 1				standard ≤ 3 / reduced ≤ 1								
Torsional rigidity▲		C	Nm/arcmin	560				560								
Max. axial load** (with reference to shaft centre on output shaft)		F_{2azul}	N	10000				10000								
Weight		m	kg	39				38								
Running noise (with n_1 = 3000 min^{-1} without load)		L_{PA}	dB(A)	≤ 66				≤ 66								
Inertia (with reference to input)	Ø d 24	J_1	$kgcm^2$	-	-	-	-	10,42	8,73	8,29	7,37	7,15	6,61	6,53	6,44	6,40
	Ø d 28	J_1	$kgcm^2$	-	-	-	-	12,19	10,49	10,06	9,12	8,90	8,36	8,28	8,20	8,15
	Ø d 32	J_1	$kgcm^2$	-	-	-	-	12,50	10,80	10,37	9,43	9,21	8,67	8,59	8,51	8,46
	Ø d 38	J_1	$kgcm^2$	78,48	67,67	58,91	54,28	13,48	11,78	11,35	10,39	10,17	9,63	9,55	9,46	9,42
	Ø d 38	J_1	$kgcm^2$	78,11	67,30	58,54	53,91	-	-	-	-	-	-	-	-	-
	Ø d 48	J_1	$kgcm^2$	77,31	66,51	57,75	53,12	-	-	-	-	-	-	-	-	-
	Ø d 55	J_1	$kgcm^2$	75,92	65,11	56,36	51,72	-	-	-	-	-	-	-	-	-

MPG				500								
Gear stages				1			2					
Ratio		i		5	7	10	20	25	35	50	70	100
Max. acceleration torque (max. 1000 cycles per hour)		T_{2bzul}	Nm	3000	2200	1500	3000	3000	3000	3000	2200	1500
Nominal torque on output (with n_{1Nzul})		T_{2Nzul}	Nm	2200	1650	1000	2200	2200	2200	2200	1650	1000
Emergency stop torque (permissible 1000 times during gearbox life time)		$T_{2Notzul}$	Nm	5200	5200	5000	5200	5200	5200	5200	5200	5000
Permissible average input speed (with T_{2Nzul} and 20 °C ambient temperature)		n_{1mzul}	min^{-1}	1000	1400	1700	2000	2000	2000	2300	2400	2500
Max. input speed		$n_{1maxzul}$	min^{-1}	2500			3500					
Max. backlash*		j	arcmin	standard ≤ 3 / reduced ≤ 1			standard ≤ 3 / reduced ≤ 2					
Torsional rigidity▲		C	Nm/arcmin	900			900					
Max. axial load** (with reference to shaft centre on output shaft)		F_{2azul}	N	33000			33000					
Weight		m	kg	60			75					
Running noise (with n_1 = 2000 min^{-1} without load)		L_{PA}	dB(A)	≤ 66			≤ 66					
Inertia (with reference to input)	Ø d 38	J_1	$kgcm^2$	93,68	75,91	64,49	67,72	60,79	55,39	52,55	52,33	52,22
	Ø d 42	J_1	$kgcm^2$	93,30	75,54	64,12	67,35	60,42	55,01	52,17	51,96	51,85
	Ø d 48	J_1	$kgcm^2$	92,51	74,74	63,32	66,56	59,62	54,22	51,38	51,16	51,05
	Ø d 55	J_1	$kgcm^2$	91,12	73,35	61,93	65,16	58,23	52,83	49,99	49,77	49,66

▲ with reference to output
* measured with 2 % nominal torque on output shaft
** charge centre of output shaft at output speed 250 min^{-1}. Please contact us for combined load applications

MPG 600

TECHNICAL DATA

MPG				600								
Gear stages				1			2					
Ratio		i		5	7	10	20	25	35	50	70	100
Max. acceleration torque (max. 1000 cycles per hour)		T_{2bzul}	Nm	4500	3400	2300	4500	4500	4500	4500	3400	2300
Nominal torque on output (with n_{1Nzul})		T_{2Nzul}	Nm	3250	2600	1600	3250	3250	3250	3250	2600	1600
Emergency stop torque (permissible 1000 times during gearbox life time)		$T_{2Notzul}$	Nm	8500	8500	6800	8500	8500	8500	8500	8500	6800
Permissible average input speed (with T_{2Nzul} and 20 °C ambient temperature)		n_{1mzul}	min^{-1}	900	1300	1500	1500	1500	1500	2000	2100	2200
Max. input speed		$n_{1maxzul}$	min^{-1}	2500			3500					
Max. backlash*		j	arcmin	standard ≤ 3 / reduced ≤ 1			standard ≤ 3 / reduced ≤ 2					
Torsional rigidity▲		C	Nm/arcmin	1300			1300					
Max. axial load** (with reference to shaft centre on output shaft)		F_{2azul}	N	50000			50000					
Weight		m	kg	80			93					
Running noise (with n_1 = 2000 min^{-1} without load)		L_{PA}	dB(A)	≤ 66			≤ 66					
Inertia (with reference to input)	Ø d 38	J_1	$kgcm^2$	174,47	142,13	124,89	72,68	63,21	56,20	52,72	52,40	52,22
	Ø d 42	J_1	$kgcm^2$	175,86	143,52	126,28	72,30	62,84	55,83	52,35	52,03	51,85
	Ø d 48	J_1	$kgcm^2$	176,66	144,31	127,08	71,51	62,04	55,03	51,55	51,23	51,06
	Ø d 55	J_1	$kgcm^2$	177,03	144,68	127,45	70,12	60,65	53,64	50,16	49,84	49,67
	Ø d 60	J_1	$kgcm^2$	173,09	140,75	123,51	-	-	-	-	-	-

▲ with reference to output
* measured with 2 % nominal torque on output shaft
** charge centre of output shaft at output speed 250 min^{-1}. Please contact us for combined load applications

▲ with reference to output
* measured with 2 % nominal torque on output shaft
** charge centre of output shaft at output speed 250 min^{-1}. Please contact us for combined load applications

MPG 050 – MPG 600

DIMENSIONS 1-STAGE

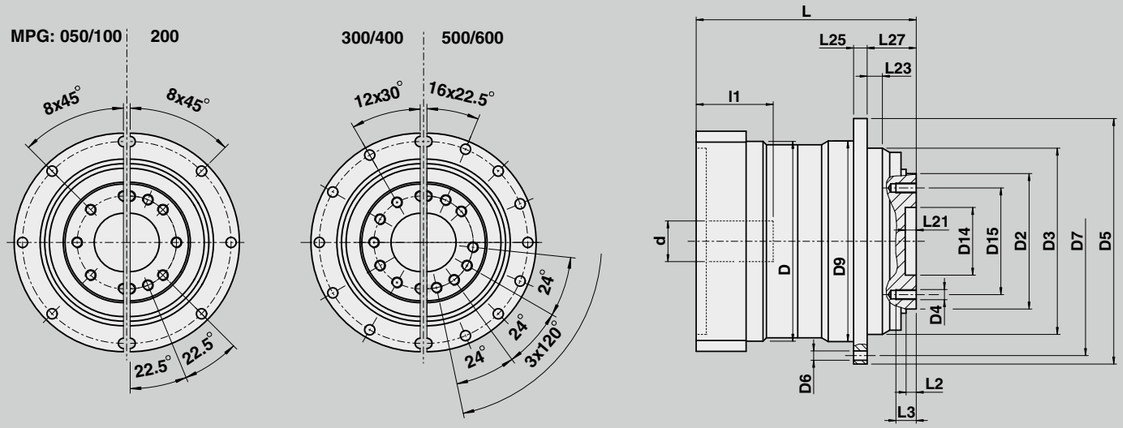

d	x	l1	Size	Ratio	D	D2	x	L2	D3	D4	x	L3	D5	D6	D7	D9	D14	D15	L	L21	L23	L25	L27
F7						h7			h7								H7						
11	x	23																					
14	x	30	**050**	4 - 10	72	40	x	3,0	64	M5	x	7	86	4,5	79	70,5	20,0	31,5	80,0	4,0	8,0	4	19,5
19	x	40																	89,0				
11	x	23																					
14	x	30	**100**	4 - 10	94	63	x	6,0	90	M6	x	10	118	5,5	109	95,5	31,5	50,0	101,5	7,0	11,0	7	30,0
19	x	40																					
24	x	50																	111,5				
19	x	40																					
24	x	50																					
28	x	60	**200**	4 - 10	120	80	x	6,5	110	M6	x	12	145	5,5	135	120,5	40,0	63,0	130,0	6,5	10,0	8	29,0
32	x	60																					
38	x	80																	155,0				
24	x	50																					
28	x	60																					
32	x	60	**300**	4 - 10	154	100	x	6,5	140	M8	x	16	179	6,6	168	152,5	50,0	80,0	165,0	6,5	14,5	10	38,0
38	x	80																					
42	x	110																					
48	x	110																	199,0				
38	x	80																					
42	x	110	**400**	4 - 10	210	160	x	8,0	200	M10	x	20	247	9,0	233	211,5	80	125	232,5	8	17,5	12	50
48	x	110																					
55	x	110																					
38	x	80																					
42	x	110	**500**	5 - 10	252	180	x	12,0	255	M16	x	25	300	13,5	280	255,1	-	140	248,5	-	20	18	66
48	x	110																					
55	x	110																					
38	x	80																					
42	x	110																					
48	x	110	**600**	5 - 10	284	200	x	15,0	285	M20	x	31	330	13,5	310	285,1	-	160	267,5	-	20	20	75
55	x	110																					
60	x	110																					

MPG 050 – MPG 600

DIMENSIONS 2-STAGE

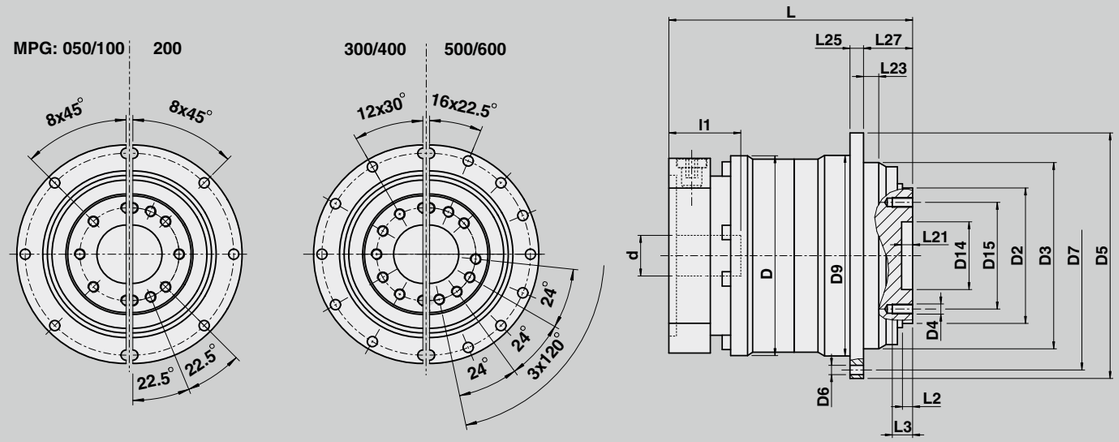

d	x	l1	Size	Ratio	D	D2	x	L2	D3	D4	x	L3	D5	D6	D7	D9	D14	D15	L	L21	L23	L25	L27
F7						h7			h7								H7						
11	x	23																					
14	x	30	**050**	16 - 100	72	40	x	3,0	64	M5	x	7	86	4,5	79	70,5	20,0	31,5	108,5	4,0	8,0	4	19,5
11	x	23																					
14	x	30	**100**	16 - 100	94	63	x	6,0	90	M6	x	10	118	5,5	109	95,5	31,5	50,0	121,5	7,0	11,0	7	30,0
11	x	23																					
14	x	30	**200**	16 - 100	120	80	x	6,5	110	M6	x	12	145	5,5	135	120,5	40,0	63,0	144,0	6,5	10,0	8	29,0
19	x	40																					
19	x	40																					
24	x	50																					
28	x	60	**300**	16 - 100	154	100	x	6,5	140	M8	x	16	179	6,6	168	152,5	50,0	80,0	183,5	6,5	14,5	10	38,0
32	x	60																					
24	x	50																					
28	x	60																					
32	x	60	**400**	16 -100	210	160	x	8,0	200	M10	x	20	247	9,0	233	211,5	80	125	248,5	8	17,5	12	50
38	x	80																					
38	x	80																					
42	x	110																					
48	x	110	**500**	20 - 100	252	180	x	12,0	255	M16	x	25	300	13,5	280	255,1	-	140	324,5	-	20	18	66
55	x	110																					
38	x	80																					
42	x	110																					
48	x	110	**600**	20 - 100	284	200	x	15,0	285	M20	x	31	330	13,5	310	285,1	-	160	342,5	-	20	20	75
55	x	110																					

MPG 050 – MPG 600

DIMENSIONS MOTOR MOUNTING 1-STAGE

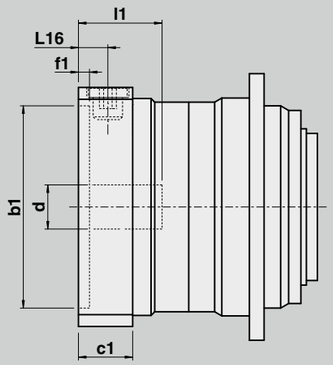

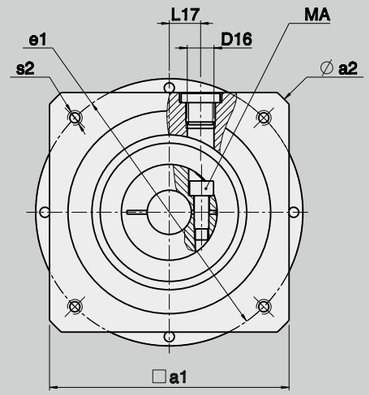

Motor dimensions																												
a1		75	75	75	95	95	75	75	95	75	95	95	95	120	115	120	120	130	130	150	140	150	160	150	160	200	250	260
a2		90	90	90	120	120	90	90	120	102	120	120	120	140	140	140	160	160	160	186	190	186	190	186	190	250	300	350
b1	G8	40	40	50	50	50	60	60	60	60	70	70	80	80	95	95	95	110	110	110	110	110	110	130	130	180	230	250
e1		63	63	70	70	95	75	75	75	90	85	90	100	100	115	115	130	130	130	130	145	145	165	165	165	215	265	300
s2		M4 x8	M5 x10	M5 x10	M5 x10	M6 x12	M5 x10	M6 x12	M6 x12	M5 x10	M6 x12	M6 x12	M6 x12	M6 x12	M8 x16	M8 x16	M8 x16	M8 x16	M8 x16	M8 x16	M8 x16	M8 x16	M10 x20	M10 x20	M10 x20	M12 x24	M12 x24	M16 x32
		-	-	-	-	-	-	-	-	-	Ø 7,0	-	-	-	-	-	-	Ø 9,0	-	-	-	-	-	-	Ø 11,0	-	-	-

Gearbox dimensions																																								
d x l1	Size	L16	L17	c1	f1	D16	Screw type	MA																																
F7								[Nm]																																
11 x 23			10				M5 / 12.9	9				x	x	x			x	x		x																			
14 x 30	**050**	10,5	10 - 12	18,5	4,5	M10x1	M5 / 12.9	9				x	x	x			x	x		x	x		x		x													
19 x 40			12 - 16				M6 / 12.9	16															x		x			x										
11 x 23			10				M5 / 12.9	9							x	x			x																				
14 x 30	**100**	13,5	10 - 12	24,5	4,5	M12x1,5	M5 / 12.9	9							x	x			x			x	x		x													
19 x 40			12 - 16				M6 / 12.9	16															x		x			x										
24 x 50			16 - 21				M8 / 12.9	40																				x						x				
19 x 40			12 - 16				M6 / 12.9	16																x		x	x		x		x		x					
24 x 50			16 - 21				M8 / 12.9	40																					x		x		x		x			
28 x 60	**200**	16,0	21 - 24	29,5	6,0	M16x1,5	M10 / 12.9	80																											x	x		
32 x 60			21 - 24				M10 / 12.9	80																											x	x		
38 x 80			24 - 26				M10 / 12.9	80																												x	x	
24 x 50			16 - 21				M8 / 12.9	40																								x		x				
28 x 60			21 - 24				M10 / 12.9	80																												x		
32 x 60	**300**	20,5	21 - 24	36,5	6,0	M20x1,5	M10 / 12.9	80																												x		
38 x 80			24 - 26				M10 / 12.9	80																												x	x	
42 x 110			26				M12 / 12.9	135																													x	
48 x 110			26				M12 / 12.9	135																													x	
38 x 80																																				x	x	x
42 x 110	**400**	28,0	42	59,0	8,0	M22x1,5	M12 / 12.9	135																												x	x	x
48 x 110																																				x	x	x
55 x 110																																				x	x	x
38 x 80																																				x	x	x
42 x 110	**500**	28,0	42	59,0	8,0	M22x1,5	M12 / 12.9	135																												x	x	x
48 x 110																																				x	x	x
55 x 110																																				x	x	x
38 x 80																																				x	x	x
42 x 110																																				x	x	x
48 x 110	**600**	28,0	42	59,0	8,0	M22x1,5	M16 / 12.9	330																												x	x	x
55 x 110																																				x	x	x
60 x 110																																				x	x	x

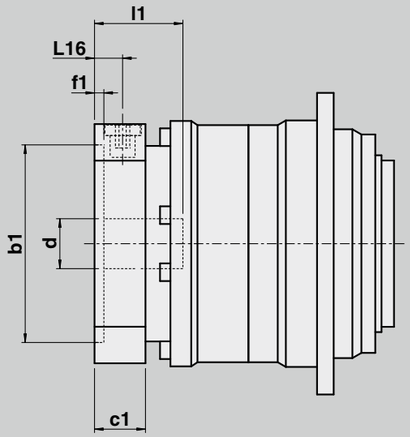

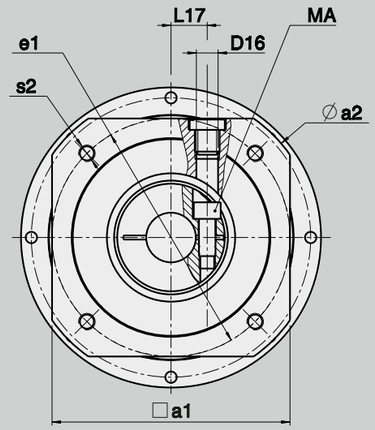

Gearbox dimensions										Motor dimensions																													
d x l1	Size	L16	L17	c1	f1	D16	Screw type	MA																															
F7								[Nm]																															
									a1	75	75	75	95	95	75	75	95	75	95	95	95	120	115	120	120	130	130	150	140	150	160	150	160	200	250	260				
									a2	90	90	90	120	120	90	90	120	102	120	120	120	140	140	140	160	160	160	186	190	186	190	186	190	250	300	350				
									b1	G8	40	40	50	50	50	60	60	60	60	70	70	80	80	95	95	95	110	110	110	110	110	110	130	130	180	230	250				
									e1	63	63	70	70	95	75	75	75	90	85	90	100	100	115	115	130	130	130	130	145	145	165	165	165	215	265	300				
11 x 23	050	10,5	10	18,5	4,5	M10x1	M5 / 12.9	9	s2	M4 x8	M5 x10	M5 x10	M5 x10	M6 x12	M5 x10	M6 x12	M6 x12	M5 x10	M6 x12	M6 x12	M6 x12	M6 x12	M8 x16	M8 x16	M8 x16	M8 x16	M8 x16	M8 x16	M8 x16	M8 x16	M10 x20	M10 x20	M10 x20	M12 x24	M12 x24	M16 x32	x	x	x		
14 x 30			10 - 12				M5 / 12.9	9		-	-	-	-	-	-	-	-	-	Ø 7,0	-	-	-	-	-	-	Ø 9,0	-	-	-	-	-	-	Ø 11,0	-	-	-	x	x	x		
11 x 23	100	10,5	10	18,5	4,5	M10x1	M5 / 12.9	9																															
14 x 30			10 - 12				M5 / 12.9	9																															
11 x 23	200	13,5	10	24,5	4,5	M12x1,5	M5 / 12.9	9																															
14 x 30			10 - 12				M5 / 12.9	9																															
19 x 40			12 - 16				M6 / 12.9	16																															
19 x 40	300	16,0	12 - 16	29,5	6,0	M16x1,5	M6 / 12.9	16																															
24 x 50			16 - 21				M8 / 12.9	40																															
28 x 60			21 - 24				M10 / 12.9	80																															
32 x 60			16 - 24				M10 / 12.9	80																															
24 x 50	400	20,5	16 - 21	36,5	6,0	M20x1,5	M8 / 12.9	40																															
28 x 60			21 - 24				M10 / 12.9	80																															
32 x 60			21 - 24				M10 / 12.9	80																															
38 x 80			24 - 26				M10 / 12.9	80																															
38 x 80	500	28,0	42	59,0	8,0	M22x1,5	M12 / 12.9	135																															
42 x 110																																							
48 x 110																																							
55 x 110																																							
38 x 80	600	28,0	42	59,0	8,0	M22x1,5	M12 / 12.9	135																															
42 x 110																																							
48 x 110																																							
55 x 110																																							

MPL
TECHNICAL DATA

Technical specifications on this page and in the tables on the following three pages are intended only for rough preselection.

Gear teeth:	spur gear
Direction of rotation:	input and output in the same direction
Efficiency:	1-stage η ≥ 97 % 2-stage η ≥ 95 %
Life time:	20000 h
Permissible gearbox temperature at housing:	-10 °C to +90 °C
Lubrication:	lubricated for life
Mounting position:	any, please specify when ordering
Surface protection:	Primer coat RAL 9005 Black
Protection rating:	IP54

MPL 050 - MPL 100
TECHNICAL DATA

The following technical specifications in the table are intended only for rough preselection

MPL			050												
Gear stages			1					2							
Ratio	i		3	4	5	7	10	12	16	20	28	35	50	70	100
Max. acceleration torque (max. 1000 cycles per hour)	T_{2bzul}	Nm	32	40	40	40	32	40	40	40	40	40	40	40	32
Nominal torque on output (with n_{1Nzul})	T_{2Nzul}	Nm	20	25	25	25	15	25	25	25	25	25	25	25	15
Emergency stop torque (permissible 1000 times during gearbox life time)	$T_{2Notzul}$	Nm	80	100	100	100	80	100	100	100	100	100	100	100	80
Permissible average input speed (with T_{2Nzul} and 20 °C ambient temperature)	n_{1mzul}	min^{-1}	2600	3300	3300	4000	4000	4400	4400	4400	4800	4800	4800	5500	5500
Max. input speed	$n_{1maxzul}$	min^{-1}	8000					8000							
Max. backlash*	j	arcmin	≤ 8					≤ 10							
Torsional rigidity▲	C	Nm/arcmin	3,5					3,5							
Max. radial load** (with reference to shaft centre on output shaft)	F_{2rzul}	N	1450					1450							
Max. axial load** (with reference to shaft centre on output shaft)	F_{2azul}	N	1550					1550							
Weight	m	kg	1,9					2,5							
Running noise (with n_1 = 3000 min^{-1} without load)	L_{PA}	dB(A)	≤ 70					≤ 70							
Inertia (with reference to input) Ø d 9	J_1	$kgcm^2$	0,28	0,23	0,21	0,19	0,18	0,26	0,21	0,20	0,19	0,19	0,18	0,18	0,18
Inertia (with reference to input) Ø d 11	J_1	$kgcm^2$	0,28	0,22	0,20	0,19	0,18	0,26	0,21	0,20	0,19	0,19	0,18	0,18	0,18
Inertia (with reference to input) Ø d 14	J_1	$kgcm^2$	0,27	0,22	0,20	0,19	0,18	0,26	0,21	0,19	0,18	0,18	0,18	0,18	0,18

MPL			100												
Gear stages			1					2							
Ratio	i		3	4	5	7	10	12	16	20	28	35	50	70	100
Max. acceleration torque (max. 1000 cycles per hour)	T_{2bzul}	Nm	80	100	100	100	80	100	100	100	100	100	100	100	80
Nominal torque on output (with n_{1Nzul})	T_{2Nzul}	Nm	56	70	70	70	45	70	70	70	70	70	70	70	45
Emergency stop torque (permissible 1000 times during gearbox life time)	$T_{2Notzul}$	Nm	200	250	250	215	200	250	250	250	250	250	250	215	200
Permissible average input speed (with T_{2Nzul} and 20 °C ambient temperature)	n_{1mzul}	min^{-1}	2300	2900	2900	3100	3100	3500	3500	3500	3800	3800	3800	4500	4500
Max. input speed	$n_{1maxzul}$	min^{-1}	6000					6000							
Max. backlash*	j	arcmin	≤ 8					≤ 10							
Torsional rigidity▲	C	Nm/arcmin	10					10							
Max. radial load** (with reference to shaft centre on output shaft)	F_{2rzul}	N	2400					2400							
Max. axial load** (with reference to shaft centre on output shaft)	F_{2azul}	N	1900					1900							
Weight	m	kg	3,8					4,8							
Running noise (with n_1 = 3000 min^{-1} without load)	L_{PA}	dB(A)	≤ 72					≤ 72							
Inertia (with reference to input) Ø d 9	J_1	$kgcm^2$	1,06	0,82	0,74	0,67	0,64	0,95	0,76	0,70	0,65	0,65	0,63	0,63	0,63
Inertia (with reference to input) Ø d 11	J_1	$kgcm^2$	1,06	0,82	0,74	0,67	0,64	0,95	0,76	0,70	0,65	0,65	0,63	0,63	0,63
Inertia (with reference to input) Ø d 14	J_1	$kgcm^2$	1,05	0,82	0,73	0,66	0,63	0,94	0,75	0,69	0,65	0,64	0,62	0,62	0,62
Inertia (with reference to input) Ø d 19	J_1	$kgcm^2$	1,03	0,79	0,71	0,64	0,61	0,91	0,73	0,67	0,62	0,62	0,60	0,60	0,60

▲ with reference to output
* measured with 2 % nominal torque on output shaft
** charge centre of output shaft at output speed 250 min^{-1}. Please contact us for combined load applications

MPL 200

TECHNICAL DATA

MPL				200													
Gear stages				1					2								
Ratio		i		3	4	5	7	10	12	16	20	28	35	50	70	100
Max. acceleration torque (max. 1000 cycles per hour)		T_{2bzul}	Nm	200	250	250	250	200	250	250	250	250	250	250	250	200
Nominal torque on output (with n_{1Nzul})		T_{2Nzul}	Nm	135	170	170	170	110	170	170	170	170	170	170	170	110
Emergency stop torque (permissible 1000 times during gearbox life time)		$T_{2Notzul}$	Nm	500	625	625	550	500	625	625	625	625	625	625	550	500
Permissible average input speed (with T_{2Nzul} and 20 °C ambient temperature)		n_{1mzul}	min^{-1}	2000	2500	2500	2800	2800	3100	3100	3100	3500	3500	3500	4200	4200
Max. input speed		$n_{1maxzul}$	min^{-1}			4800						4800				
Max. backlash*		j	arcmin			≤ 8						≤ 10				
Torsional rigidity▲		C	Nm/arcmin			26						26				
Max. radial load** (with reference to shaft centre on output shaft)		F_{2rzul}	N			4600						4600				
Max. axial load** (with reference to shaft centre on output shaft)		F_{2azul}	N			4000						4000				
Weight		m	kg			9,5						11,8				
Running noise (with n_1 = 3000 min^{-1} without load)		L_{PA}	dB(A)			≤ 74						≤ 74				
Inertia (with reference to input)	Ø d 9	J_1	$kgcm^2$	7,08	6,11	5,76	5,48	5,35	6,55	5,83	5,59	5,40	5,40	5,31	5,30	5,30
	Ø d 11	J_1	$kgcm^2$	7,08	6,11	5,75	5,48	5,34	6,54	5,83	5,59	5,40	5,39	5,30	5,30	5,30
	Ø d 14	J_1	$kgcm^2$	7,07	6,10	5,75	5,47	5,33	6,54	5,82	5,58	5,39	5,38	5,29	5,29	5,29
	Ø d 19	J_1	$kgcm^2$	7,03	6,06	5,71	5,43	5,30	6,50	5,78	5,54	5,35	5,35	5,26	5,25	5,25
	Ø d 24	J_1	$kgcm^2$	6,95	5,98	5,63	5,35	5,22	6,42	5,70	5,46	5,27	5,27	5,18	5,17	5,17
	Ø d 28	J_1	$kgcm^2$	6,84	5,87	5,51	5,24	5,10	6,30	5,59	5,35	5,16	5,15	5,06	5,06	5,06
	Ø d 32	J_1	$kgcm^2$	6,66	5,69	5,33	5,06	4,92	6,12	5,41	5,17	4,98	4,97	4,88	4,88	4,88

▲ with reference to output
* measured with 2 % nominal torque on output shaft
** charge centre of output shaft at output speed 250 min^{-1}. Please contact us for combined load applications

MPL 300

TECHNICAL DATA

MPL				300												
Gear stages				1					2							
Ratio		i		3	4	5	7	10	12	16	20	28	35	50	70	100
Max. acceleration torque (max. 1000 cycles per hour)		T_{2bzul}	Nm	400	500	500	500	400	500	500	500	500	500	500	500	400
Nominal torque on output (with n_{1Nzul})		T_{2Nzul}	Nm	290	360	360	360	220	360	360	360	360	360	360	360	220
Emergency stop torque (permissible 1000 times during gearbox life time)		$T_{2Notzul}$	Nm	1000	1250	1250	1100	1000	1250	1250	1250	1250	1250	1250	1100	1000
Permissible average input speed (with T_{2Nzul} and 20 °C ambient temperature)		n_{1mzul}	min^{-1}	1700	2100	2100	2600	2600	2900	2900	2900	3200	3200	3200	3900	3900
Max. input speed		$n_{1maxzul}$	min^{-1}			4500						4500				
Max. backlash*		j	arcmin			≤ 8						≤ 10				
Torsional rigidity▲		C	Nm/arcmin			50						50				
Max. radial load** (with reference to shaft centre on output shaft)		F_{2rzul}	N			7500						7500				
Max. axial load** (with reference to shaft centre on output shaft)		F_{2azul}	N			6000						6000				
Weight		m	kg			18,4						23,2				
Running noise (with n_1 = 3000 min^{-1} without load)		L_{PA}	dB(A)			≤ 75						≤ 75				
Inertia (with reference to input)	Ø d 19	J_1	$kgcm^2$	16,58	13,48	12,32	11,35	10,82	14,31	12,20	11,47	10,89	10,86	10,58	10,57	10,56
	Ø d 24	J_1	$kgcm^2$	16,48	13,38	12,22	11,25	10,72	14,20	12,10	11,37	10,79	10,76	10,48	10,47	10,46
	Ø d 28	J_1	$kgcm^2$	16,33	13,23	12,08	11,10	10,58	14,06	11,96	11,22	10,64	10,62	10,33	10,32	10,32
	Ø d 32	J_1	$kgcm^2$	16,11	13,01	11,85	10,88	10,35	13,83	11,73	11,00	10,42	10,39	10,11	10,10	10,09
	Ø d 38	J_1	$kgcm^2$	15,57	12,47	11,31	10,34	9,82	13,30	11,20	10,46	9,88	9,86	9,57	9,56	9,56

▲ with reference to output
* measured with 2 % nominal torque on output shaft
** charge centre of output shaft at output speed 250 min^{-1}. Please contact us for combined load applications

MPL 050 - MPL 300
DIMENSIONS 1-STAGE

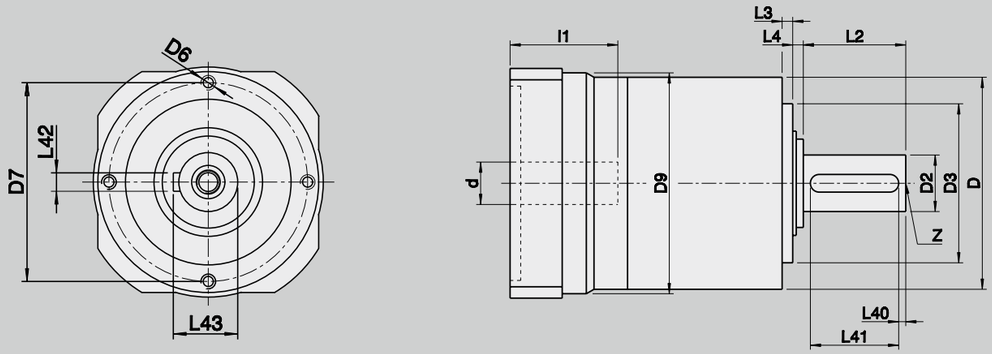

d	x	l1	Size	Ratio	D	D2	x	L2	D3	D6	D7	D9	L3	L4	L40	L41	L42	L43	Z DIN 332
F7						k6			h6								h9		
9	x	20	**050**	3 - 10	70	16	x	28	52	M5 x 10	62	75	5	3	2	22	5	18,0	D M5
11	x	23																	
14	x	30																	
9	x	20	**100**	3 - 10	90	22	x	36	68	M6 x 12	80	95	5	5	2	28	6	24,5	D M8
11	x	23																	
14	x	30																	
19	x	40																	
9	x	20	**200**	3 - 10	120	32	x	58	90	M8 x 16	108	125	6	6	4	50	10	35,0	D M12
11	x	23																	
14	x	30																	
19	x	40																	
24	x	50																	
28	x	60																	
32	x	60																	
19	x	40	**300**	3 - 10	155	40	x	82	120	M10 x 20	140	160	8	7	4	70	12	43,0	D M16
24	x	50																	
28	x	60																	
32	x	60																	
38	x	80																	

MPL 050 - MPL 300
DIMENSIONS 2-STAGE

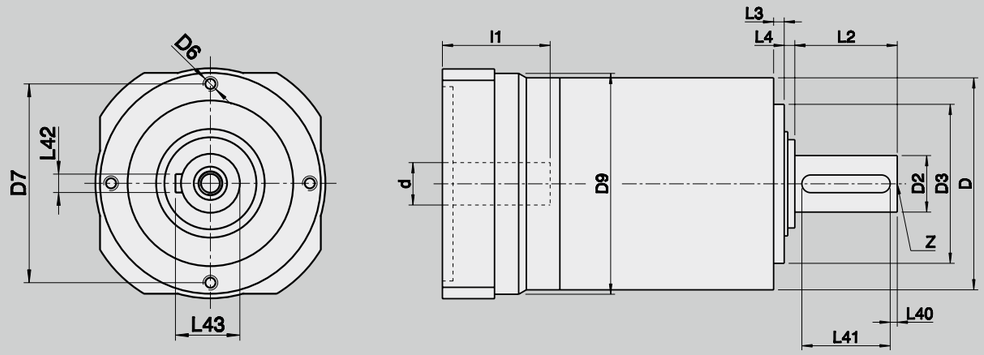

d	x	l1	Size	Ratio	D	D2	x	L2	D3	D6	D7	D9	L3	L4	L40	L41	L42	L43	Z DIN 332
F7						k6			h6								h9		
9	x	20	**050**	12 - 100	70	16	x	28	52	M5 x 10	62	75	5	3	2	22	5	18,0	D M5
11	x	23																	
14	x	30																	
9	x	20	**100**	12 - 100	90	22	x	36	68	M6 x 12	80	95	5	5	2	28	6	24,5	D M8
11	x	23																	
14	x	30																	
19	x	40																	
9	x	20	**200**	12 - 100	120	32	x	58	90	M8 x 16	108	125	6	6	4	50	10	35,0	D M12
11	x	23																	
14	x	30																	
19	x	40																	
24	x	50																	
28	x	60																	
32	x	60																	
19	x	40	**300**	12 - 100	155	40	x	82	120	M10 x 20	140	160	8	7	4	70	12	43,0	D M16
24	x	50																	
28	x	60																	
32	x	60																	
38	x	80																	

MPL 050 - MPL 300

DIMENSIONS MOTOR MOUNTING 1-STAGE

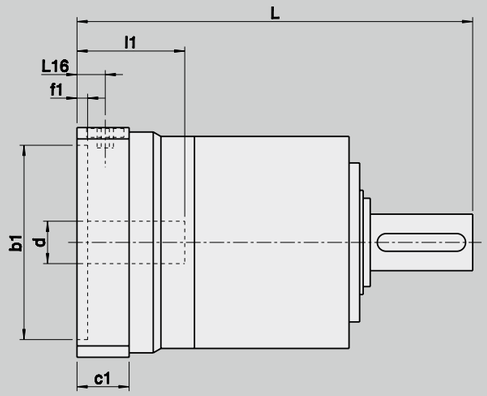

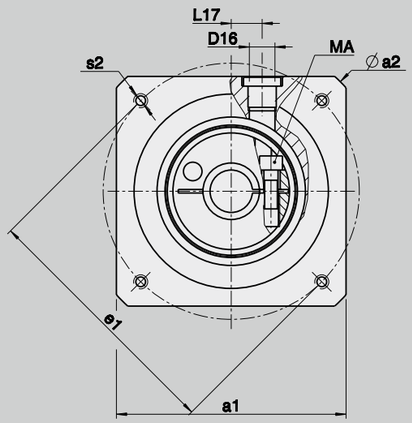

Motor dimensions																												
a1		75	75	75	95	95	75	75	95	75	95	95	95	120	115	120	120	130	130	150	140	150	160	150	160	200	250
a2		90	90	90	120	120	90	90	120	102	120	120	120	140	140	140	160	160	160	186	190	186	190	186	190	250	300
b1	G8	40	40	50	50	50	60	60	60	60	70	70	80	80	95	95	95	110	110	110	110	110	110	130	130	180	230
e1		63	63	70	70	95	75	75	75	90	85	90	100	100	115	115	130	130	130	130	145	145	165	165	165	215	265
s2		M4 x8	M5 x10	M5 x10	M5 x10	M6 x12	M5 x10	M6 x12	M6 x12	M5 x10	M6 x12	M6 x12	M6 x12	M6 x12	M8 x16	M8 x16	M8 x16	M8 x16	M8 x16	M8 x16	M8 x 16	M8 x16	M10 x20	M10 x20	M10 x20	M12 x24	M12 x24
		-	-	-	-	-	-	-	-	-	-	-	-	-	-	-	-	Ø 9,0	-	-	-	-	-	-	Ø 11,0	-	-

Gearbox dimensions																															
d	**x**	**l1**	**Size**	**L**	**L16**	**L17**	**c1**	**f1**	**D16**	**Screw type**	**MA**																				
F7											[Nm]																				
9	x	20										x	x	x			x	x		x	x		x		x								
11	x	23	**050**	128,5	10,5	10 - 12	18,5	4,5	M10 x 1	M5 / 12.9	9	x	x	x			x	x		x	x		x		x								
14	x	30										x	x	x			x	x		x	x		x		x								
9	x	20													x	x			x			x	x		x			x				x		
11	x	23	**100**	157,5	13,5	12 - 16	24,5	4,5	M12 x 1,5	M6 / 12.9	16				x	x			x			x	x		x			x				x		
14	x	30													x	x			x			x	x		x			x				x		
19	x	40													x	x			x			x	x		x			x				x		
9	x	20																						x		x	x		x		x		x	x	
11	x	23																						x		x	x		x		x		x	x	
14	x	30																						x		x	x		x		x		x	x	
19	x	40	**200**	224,0	16,0	21 - 24	29,5	6,0	M16 x 1,5	M10 / 12.9	80													x		x	x		x		x		x	x	
24	x	50																						x		x	x		x		x		x	x	
28	x	60																						x		x	x		x		x		x	x	
32	x	60																						x		x	x		x		x		x	x	
19	x	40																							x						x		x	x	
24	x	50																							x						x		x	x	
28	x	60	**300**	289,5	20,5	24 - 26	36,5	6,0	M20 x 1,5	M10/12.9	80														x						x		x	x	
32	x	60																							x						x		x	x	
38	x	80																							x						x		x	x	

MPL 050 - MPL 300

DIMENSIONS MOTOR MOUNTING 2-STAGE

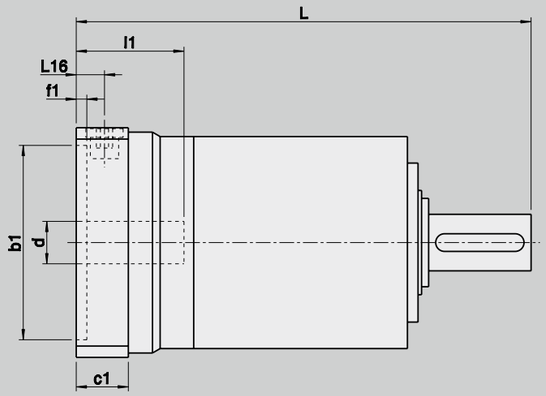

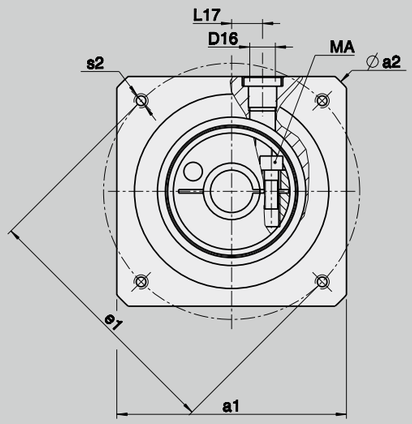

Gearbox dimensions

d	x	l1	Size	L	L16	L17	c1	f1	D16	Screw type	MA
F7											[Nm]
9	x	20									
11	x	23	**050**	150,5	10,5	10 - 12	18,5	4,5	M10 x 1	M5 / 12.9	9
14	x	30									
9	x	20									
11	x	23	**100**	184,5	13,5	12 - 16	24,5	4,5	M12 x 1,5	M6 / 12.9	16
14	x	30									
19	x	40									
9	x	20									
11	x	23									
14	x	30									
19	x	40	**200**	257,5	16,0	21 - 24	29,5	6,0	M16 x 1,5	M10 / 12.9	80
24	x	50									
28	x	60									
32	x	60									
19	x	40									
24	x	50									
28	x	60	**300**	331,5	20,5	24 - 26	36,5	6,0	M20 x 1,5	M10 / 12.9	80
32	x	60									
38	x	80									

Motor dimensions

a1		75	75	75	95	95	75	75	95	75	95	95	95	120	115	120	120	130	130	150	140	150	160	150	160	200	250
a2		90	90	90	120	120	90	90	120	102	120	120	120	140	140	140	160	160	160	186	190	186	190	186	190	250	300
b1	G8	40	40	50	50	50	60	60	60	60	70	70	80	80	95	95	95	110	110	110	110	110	110	130	130	180	230
e1		63	63	70	70	95	75	75	75	90	85	90	100	100	115	115	130	130	130	130	145	145	165	165	165	215	265
s2		M4 x8	M5 x10	M5 x10	M5 x10	M6 x12	M5 x10	M6 x12	M5/M6 x12	M5 x10	M6 x12	M6 x12	M6 x12	M6 x12	M8 x16	M8 x16	M8 x16	M8 x16	M8 x16	M8 x16	M8 x 16	M8 x16	M10 x20	M10 x20	M10 x20	M12 x24	M12 x24
		-	-	-	-	-	-	-	-	-	-	-	-	-	-	-	-	Ø 9,0	-	-	-	-	-	-	Ø 11,0	-	-
		x	x	x			x	x		x	x		x		x												
		x	x	x			x	x		x	x		x		x												
		x	x	x			x	x		x	x		x		x												
					x	x			x			x	x		x			x						x			
					x	x			x			x	x		x			x						x			
					x	x			x			x	x		x			x						x			
					x	x			x			x	x		x			x						x			
														x		x	x		x		x		x		x	x	
														x		x	x		x		x		x		x	x	
														x		x	x		x		x		x		x	x	
														x		x	x		x		x		x		x	x	
														x		x	x		x		x		x		x	x	
														x		x	x		x		x		x		x	x	
														x		x	x		x		x		x		x	x	
																				x		x		x		x	x
																				x		x		x		x	x
																				x		x		x		x	x
																				x		x		x		x	x
																				x		x		x		x	x

SERVO SPIRAL BEVEL GEARBOXES

Unlike with a spiral bevel gearbox, the axes of drive pinion and bevel gear are offset on servo spiral bevel gearboxes, in other words they do not intersect.

The hypoid gearing offers higher ratios in one stage and much quieter running noise.

The convincing features of the servo spiral bevel gearbox are a low and constant backlash coupled with high nominal speeds.

The servo spiral bevel gearbox can also be used as a multi-stage gearbox in combination with low-backlash planetary gears if greater capacities are required.

SK (N)		
050	100	200
Page 62	Page 63	Page 63

SKH		
050	100	200
Page 68	Page 69	Page 69

SKPR (N)			
100	200	300	04
Page 74	Page 75	Page 75	Page 76

SKPRW		
100	200	300
Page 82	Page 83	Page 83

SKPG			
100	200	300	04
Page 86	Page 87	Page 87	Page 88

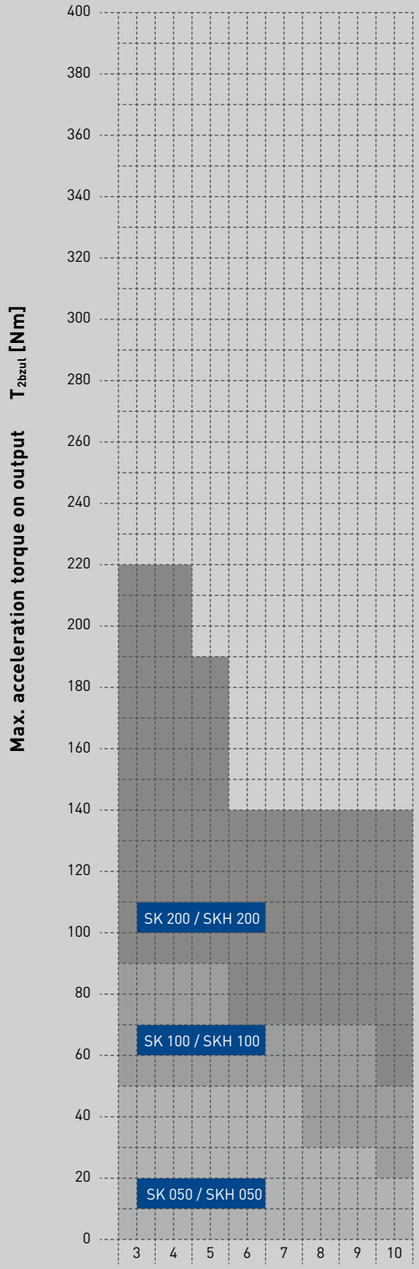

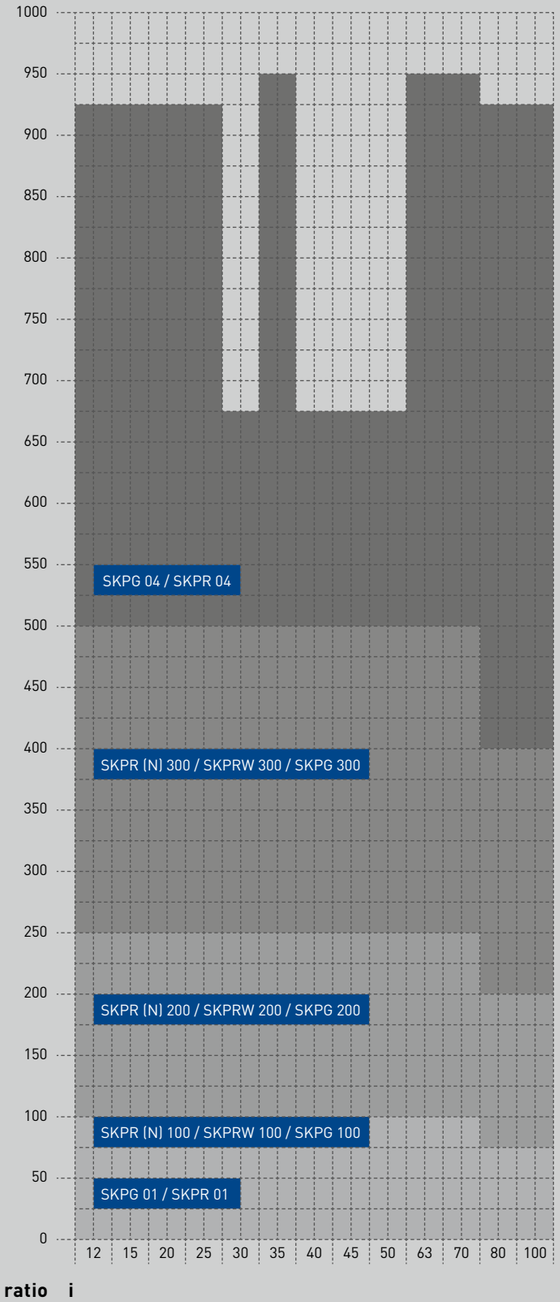

SK(N)

TECHNICAL DATA

Technical specifications on this page and in the tables on the following two pages are intended only for rough preselection.

Gear teeth: SK(N) 050 – SK(N) 200
Klingelnberg spiral bevel toothing

Direction of rotation: The opposite direction when facing C and A

Efficiency:
Size 050 η ~0.95
Size 100 η ~0.95
Size 200 η ~0.94

Life time: 20000 h

Permissible gearbox temperature at housing: -10 °C to +90 °C

Lubrication: lubricated for life

Mounting position: Any, please specify when ordering

Surface protection: Primer coat RAL 9005 Black

Protection rating: IP 54

SK(N)				050							
Ratio		i		3	4	5	6	7	8	9	10
Max. acceleration torque (max. 1000 cycles per hour)		T_{2bzul}	Nm	54	54	54	51	51	30	27	23
Nominal torque on output (with n_{1Nzul})		T_{2Nzul}	Nm	40	40	40	35	35	22	20	16
Emergency stop torque (permissible 1000 times during gearbox life time)		$T_{2Notzul}$	Nm	72	72	72	70	70	40	36	30
Permissible average input speed (with T_{2Nzul} and 20 °C ambient temperature)		n_{1mzul}	min^{-1}	4000	4000	4000	4000	4000	4000	4000	4000
Max. input speed		$n_{1maxzul}$	min^{-1}	7500							
Max. backlash*		j	arcmin	standard ≤ 5 / reduced ≤ 3							
Torsional rigidity▲		C	Nm/arcmin	on request							
Max. radial load** (with reference to shaft centre on output shaft)		F_{2rzul}	N	900							
Max. axial load** (with reference to shaft centre on output shaft)		F_{2azul}	N	700							
Weight		m	kg	approx. 3,2							
Running noise (with n_1 = 3000 min^{-1} without load)		L_{PA}	dB(A)	approx. 65 / distance of 1 m							
Inertia (with reference to input)	Ø d 9	J_1	$kgcm^2$	0,65	0,54	0,49	0,47	0,45	0,44	0,43	0,42
	Ø d 11	J_1	$kgcm^2$	0,65	0,54	0,49	0,47	0,45	0,44	0,43	0,42
	Ø d 14	J_1	$kgcm^2$	0,65	0,54	0,49	0,47	0,45	0,44	0,43	0,42

▲ with reference to output
* measured with 2 % nominal torque on output shaft
** charge centre of output shaft at output speed 250 min^{-1}. Please contact us for combined load applications

SK(N) 050 – SK(N) 200

TECHNICAL DATA

The following technical specifications in the table are intended only for rough preselection

SK(N)				100							
Ratio		i		3	4	5	6	7	8	9	10
Max. acceleration torque (max. 1000 cycles per hour)		T_{2bzul}	Nm	93	93	93	72	70	70	70	48
Nominal torque on output (with n_{1Nzul})		T_{2Nzul}	Nm	68	64	64	50	48	48	48	35
Emergency stop torque (permissible 1000 times during gearbox life time)		$T_{2Notzul}$	Nm	124	124	124	96	94	94	94	64
Permissible average input speed (with T_{2Nzul} and 20 °C ambient temperature)		n_{1mzul}	min^{-1}	4000	4000	4000	4000	4000	4000	4000	4000
Max. input speed		$n_{1maxzul}$	min^{-1}	7500							
Max. backlash*		j	arcmin	standard ≤ 5 / reduced ≤ 3							
Torsional rigidity▲		C	Nm/arcmin	on request							
Max. radial load** (with reference to shaft centre on output shaft)		F_{2rzul}	N	1400							
Max. axial load** (with reference to shaft centre on output shaft)		F_{2azul}	N	1000							
Weight		m	kg	approx. 5,4							
Running noise (with n_1 = 3000 min^{-1} without load)		L_{PA}	dB(A)	approx. 65 / distance of 1 m							
Inertia (with reference to input)	Ø d 9	J_1	$kgcm^2$	1,65	1,38	1,28	1,22	1,19	1,16	1,15	1,14
	Ø d 11	J_1	$kgcm^2$	1,65	1,38	1,28	1,22	1,19	1,16	1,15	1,14
	Ø d 14	J_1	$kgcm^2$	1,65	1,38	1,28	1,22	1,19	1,16	1,15	1,14
	Ø d 19	J_1	$kgcm^2$	1,65	1,38	1,28	1,22	1,19	1,16	1,15	1,14

SK(N)				200							
Ratio		i		3	4	5	6	7	8	9	10
Max. acceleration torque (max. 1000 cycles per hour)		T_{2bzul}	Nm	217	217	185	136	136	136	135	135
Nominal torque on output (with n_{1Nzul})		T_{2Nzul}	Nm	150	150	120	100	100	100	90	90
Emergency stop torque (permissible 1000 times during gearbox life time)		$T_{2Notzul}$	Nm	290	290	244	182	182	182	180	180
Permissible average input speed (with T_{2Nzul} and 20 °C ambient temperature)		n_{1mzul}	min^{-1}	4000	4000	4000	4000	4000	4000	4000	4000
Max. input speed		$n_{1maxzul}$	min^{-1}	6500							
Max. backlash*		j	arcmin	standard ≤ 4 / reduced ≤ 2							
Torsional rigidity▲		C	Nm/arcmin	on request							
Max. radial load** (with reference to shaft centre on output shaft)		F_{2rzul}	N	2200							
Max. axial load** (with reference to shaft centre on output shaft)		F_{2azul}	N	1600							
Weight		m	kg	approx. 9,5							
Running noise (with n_1 = 3000 min^{-1} without load)		L_{PA}	dB(A)	approx. 68 / distance of 1 m							
Inertia (with reference to input)	Ø d 11	J_1	$kgcm^2$	6,78	5,54	5,00	4,72	4,55	4,45	4,35	4,30
	Ø d 14	J_1	$kgcm^2$	6,78	5,54	5,00	4,72	4,55	4,45	4,35	4,30
	Ø d 19	J_1	$kgcm^2$	6,78	5,54	5,00	4,72	4,55	4,45	4,35	4,30
	Ø d 24	J_1	$kgcm^2$	6,78	5,54	5,00	4,72	4,55	4,45	4,35	4,30
	Ø d 28	J_1	$kgcm^2$	6,78	5,54	5,00	4,72	4,55	4,45	4,35	4,30

▲ with reference to output
* measured with 2 % nominal torque on output shaft
** charge centre of output shaft at output speed 250 min^{-1}. Please contact us for combined load applications

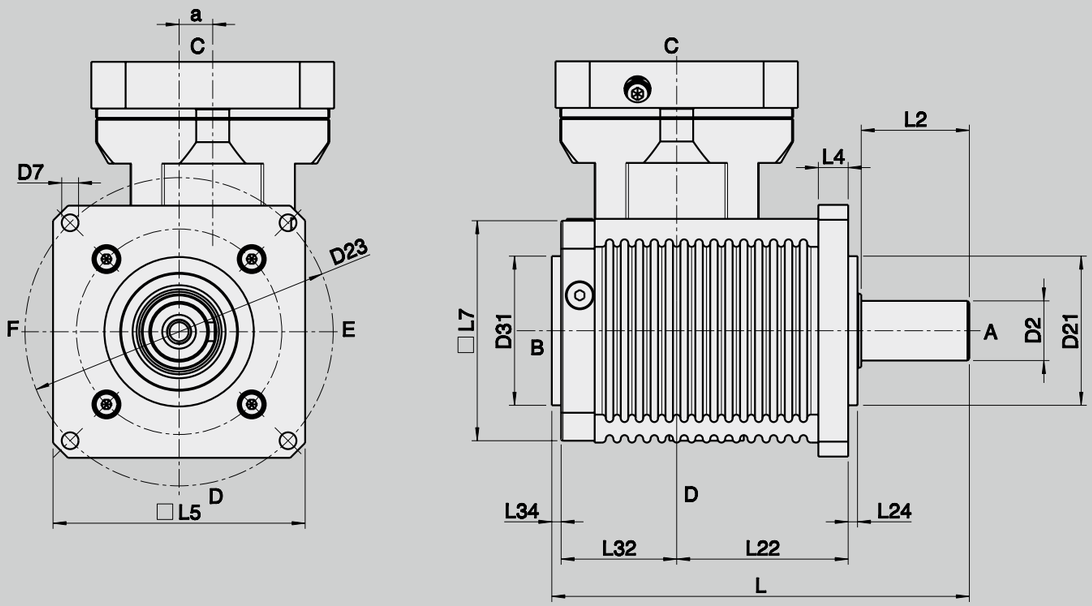

The required clamping torques MA can be found on the shrink disc.

d	x	l1	Size	D2	D7	D21	D23	D31	a	L	L2
G7				k6		g6		g6			
9	x	20	050	16	6,6	50	100	50	8	134	28
11	x	23									
14	x	30									
9	x	20	100	22	9	60	120	60	12	165	36
11	x	23									
14	x	30									
19	x	40									
11	x	23	200	32	9	80	165	80	18	224	58
14	x	30									
19	x	40									
24	x	50									
28	x	60									

d	x	l1	Size	L4	L5	L7	L22	L24	L32	L34
G7										
9	x	20	050	7,5	85	75	52,5	2,5	46	2,5
11	x	23								
14	x	30								
9	x	20	100	10	100	90	70	3	51	3
11	x	23								
14	x	30								
19	x	40								
11	x	23	200	16	135	120	92	5	62	5
14	x	30								
19	x	40								
24	x	50								
28	x	60								

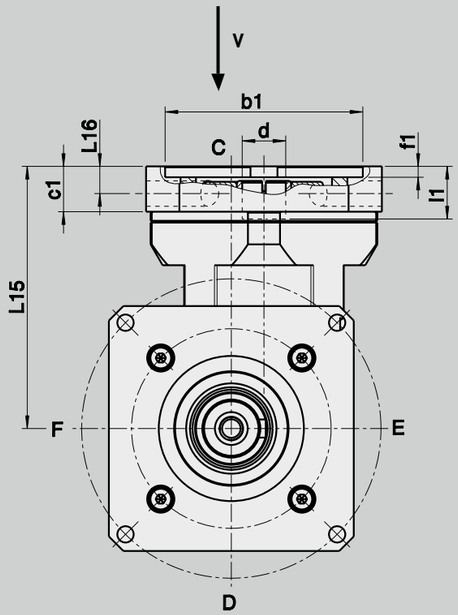

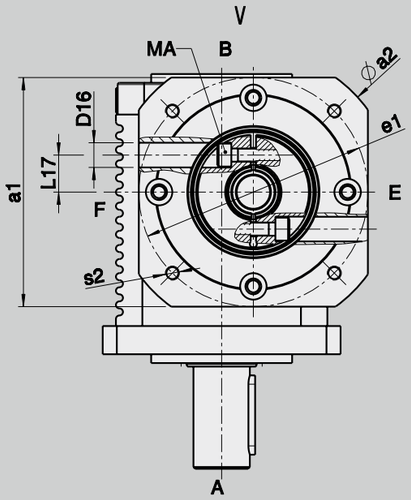

Gearbox dimensions

d	x	l1	Size	l15	l16	l17	c1	f1	D16	Screw type	MA
G7											(Nm)
9	x	20	050	98.5	9,5	10	16	4,5	8,5	M6 / 12,9	18
11	x	23		98.5	9,5	10	16	4,5	8,5	M6 / 12,9	18
14	x	30		98.5	9,5	10	16	4,5	8,5	M6 / 12,9	18
9	x	20	100	125	13	12,5	22	5	10	M6 / 12,9	18
11	x	23		125	13	12,5	22	5	10	M6 / 12,9	18
14	x	30		125	13	12,5	22	5	10	M6 / 12,9	18
19	x	40		125	13	12,5	22	5	10	M6 / 12,9	18
11	x	23	200	145	15	16,5	25	5	14	M6 / 12,9	18
14	x	30		145	15	16,5	25	5	14	M6 / 12,9	18
19	x	40		145	15	16,5	25	5	14	M8 / 12,9	39
24	x	50		145	15	16,5	25	5	14	M8 / 12,9	43
28	x	60		145	15	16,5	25	5	14	M8 / 12,9	43

Motor dimensions

a1		75	75	75	75	90	95	95	95	95	115	125	125	125	125	125	130	140	140	200
a2		90	90	90	100	120	120	120	120	120	140	140	140	140	140	140	160	160	190	250
b1	G8	50	60	60	70	80	50	60	70	80	95	60	60	70	80	95	110	110	130	180
e1		70	75	75	85	100	70	75	85	100	115	75	75	85	100	115	130	130	165	215
s2		M5 x10	M5 x10	M6 x12	M6 x12	M6 x12	M5 x10	M5 x10	M6 x12	M6 x12	M8 x16	M5 x10	M6 x12	M6 x12	M6 x12	M8 x16	M8 x16	M8 x16	M10 x20	M12 x24
		-	Ø 5,5	-	Ø 7,0	Ø 7,0	-	Ø 5,5	Ø 7,0	Ø 7,0	Ø 9,0	-	-	-	-	Ø 9,0	Ø 9,0	Ø 9,0	Ø 11,0	-
9	x	20	x	x	x	x	x					x						x		
11	x	23	x	x	x	x	x					x						x		
14	x	30	x	x	x	x	x					x						x		
9	x	20						x	x	x	x	x		x				x		x
11	x	23						x	x	x	x	x		x				x		x
14	x	30						x	x	x	x	x		x				x		x
19	x	40						x	x	x	x	x		x				x		x
11	x	23											x		x	x	x	x		x	x
14	x	30											x		x	x	x	x		x	x
19	x	40											x		x	x	x	x		x	x
24	x	50											x		x	x	x	x		x	x
28	x	60											x		x	x	x	x		x	x

SKH
TECHNICAL DATA

Technical specifications on this page and in the tables on the following two pages are intended only for rough preselection.

Gear teeth:	SK(N) 050 – SK(N) 200 Klingelnberg spiral bevel toothing
Direction of rotation:	The opposite direction when facing C and A
Efficiency:	Size 050 η ~0.95 Size 100 η ~0.95 Size 200 η ~0.94
Life time:	20000 h
Permissible gearbox temperature at housing:	-10 °C to +90 °C
Lubrication:	lubricated for life
Mounting position:	Any, please specify when ordering
Surface protection:	Primer coat RAL 9005 Black
Protection rating:	IP 54

SKH				050							
Ratio		i		3	4	5	6	7	8	9	10
Max. acceleration torque (max. 1000 cycles per hour)		T_{2bzul}	Nm	54	54	54	51	51	30	27	23
Nominal torque on output (with n_{1Nzul})		T_{2Nzul}	Nm	40	40	40	35	35	22	20	16
Emergency stop torque (permissible 1000 times during gearbox life time)		$T_{2Notzul}$	Nm	72	72	72	70	70	40	36	30
Permissible average input speed (with T_{2Nzul} and 20 °C ambient temperature)		n_{1mzul}	min^{-1}	4000							
Max. input speed		$n_{1maxzul}$	min^{-1}	7500							
Max. backlash*		j	arcmin	standard ≤ 5 / reduced ≤ 3							
Torsional rigidity▲		C	Nm/arcmin	2,8							
Max. radial load** (with reference to shaft centre on output shaft)		F_{2rzul}	N	900							
Max. axial load** (with reference to shaft centre on output shaft)		F_{2azul}	N	700							
Weight		m	kg	approx. 3,2							
Running noise (with n_1 = 3000 min^{-1} without load)		L_{PA}	dB(A)	approx. 65 / distance of 1 m							
Inertia (with reference to input)	Ø d 9	J_1	$kgcm^2$	0,65	0,54	0,49	0,47	0,45	0,44	0,43	0,42
	Ø d 11	J_1	$kgcm^2$	0,65	0,54	0,49	0,47	0,45	0,44	0,43	0,42
	Ø d 14	J_1	$kgcm^2$	0,65	0,54	0,49	0,47	0,45	0,44	0,43	0,42

▲ with reference to output
* measured with 2 % nominal torque on output shaft
** charge centre of output shaft at output speed 250 min^{-1}. Please contact us for combined load applications

SKH 050 – SKH 200
TECHNICAL DATA

The following technical specifications in the table are intended only for rough preselection

SKH				100							
Ratio		i		3	4	5	6	7	8	9	10
Max. acceleration torque (max. 1000 cycles per hour)		T_{2bzul}	Nm	93	93	93	72	70	70	70	48
Nominal torque on output (with n_{1Nzul})		T_{2Nzul}	Nm	68	64	64	50	48	48	48	35
Emergency stop torque (permissible 1000 times during gearbox life time)		$T_{2Notzul}$	Nm	124	124	124	96	94	94	94	64
Permissible average input speed (with T_{2Nzul} and 20 °C ambient temperature)		n_{1mzul}	min^{-1}	4000							
Max. input speed		$n_{1maxzul}$	min^{-1}	7500							
Max. backlash*		j	arcmin	standard ≤ 5 / reduced ≤ 3							
Torsional rigidity▲		C	Nm/arcmin	6,7							
Max. radial load** (with reference to shaft centre on output shaft)		F_{2rzul}	N	1400							
Max. axial load** (with reference to shaft centre on output shaft)		F_{2azul}	N	1000							
Weight		m	kg	approx. 5,4							
Running noise (with n_1 = 3000 min^{-1} without load)		L_{PA}	dB(A)	approx. 65 / distance of 1 m							
Inertia (with reference to input)	Ø d 9	J_1	$kgcm^2$	1,65	1,38	1,28	1,22	1,19	1,16	1,15	1,14
	Ø d 11	J_1	$kgcm^2$	1,65	1,38	1,28	1,22	1,19	1,16	1,15	1,14
	Ø d 14	J_1	$kgcm^2$	1,65	1,38	1,28	1,22	1,19	1,16	1,15	1,14
	Ø d 19	J_1	$kgcm^2$	1,65	1,38	1,28	1,22	1,19	1,16	1,15	1,14

SKH				200							
Ratio		i		3	4	5	6	7	8	9	10
Max. acceleration torque (max. 1000 cycles per hour)		T_{2bzul}	Nm	217	217	185	136	136	136	135	135
Nominal torque on output (with n_{1Nzul})		T_{2Nzul}	Nm	150	150	120	100	100	100	90	90
Emergency stop torque (permissible 1000 times during gearbox life time)		$T_{2Notzul}$	Nm	290	290	244	182	182	182	180	180
Permissible average input speed (with T_{2Nzul} and 20 °C ambient temperature)		n_{1mzul}	min^{-1}	4000							
Max. input speed		$n_{1maxzul}$	min^{-1}	6500							
Max. backlash*		j	arcmin	standard ≤ 4 / reduced ≤ 2							
Torsional rigidity▲		C	Nm/arcmin	13,8							
Max. radial load** (with reference to shaft centre on output shaft)		F_{2rzul}	N	2200							
Max. axial load** (with reference to shaft centre on output shaft)		F_{2azul}	N	1600							
Weight		m	kg	approx. 9,5							
Running noise (with n_1 = 3000 min^{-1} without load)		L_{PA}	dB(A)	approx. 65 / distance of 1 m							
Inertia (with reference to input)	Ø d 11	J_1	$kgcm^2$	6,78	5,54	5,00	4,72	4,55	4,45	4,35	4,30
	Ø d 14	J_1	$kgcm^2$	6,78	5,54	5,00	4,72	4,55	4,45	4,35	4,30
	Ø d 19	J_1	$kgcm^2$	6,78	5,54	5,00	4,72	4,55	4,45	4,35	4,30
	Ø d 24	J_1	$kgcm^2$	6,78	5,54	5,00	4,72	4,55	4,45	4,35	4,30
	Ø d 28	J_1	$kgcm^2$	6,78	5,54	5,00	4,72	4,55	4,45	4,35	4,30

▲ with reference to output
* measured with 2 % nominal torque on output shaft
** charge centre of output shaft at output speed 250 min^{-1}. Please contact us for combined load applications

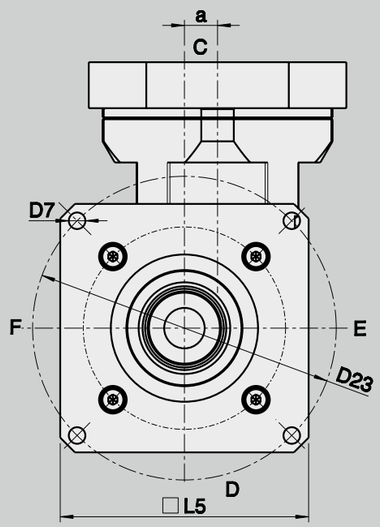

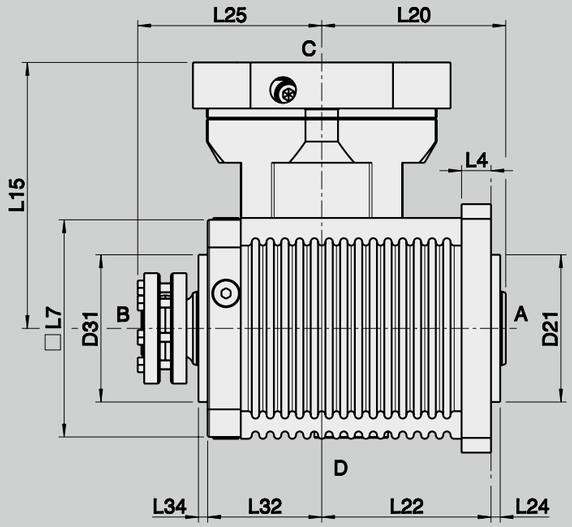

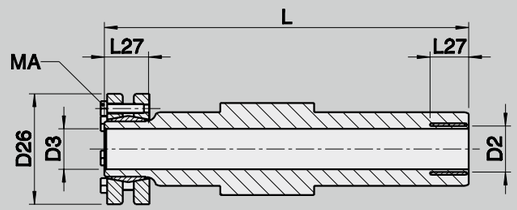

The required clamping torques MA can be found on the shrink disc.

d	x	l1	Size	D2/D3	D7	D21	D23	D26	D31	a	L	L4
G7				H7		g6			g6			
9	x	20	050	12	6,6	50	100	40	50	8	125,5	7,5
11	x	23										
14	x	30										
9	x	20	100	18	9	60	120	50	60	12	154	10
11	x	23										
14	x	30										
19	x	40										
11	x	23	200	25	9	80	165	60	80	18	198	16
14	x	30										
19	x	40										
24	x	50										
28	x	60										

The required clamping torques MA can be found on the shrink disc.

d	x	l1	Size	L5	L7	L20	L22	L24	L25	L27	L32	L34	MA
G7													
9	x	20	050	85	75	57	52,5	2,5	71,5	17,5	46	2,5	See separate note!
11	x	23											
14	x	30											
9	x	20	100	100	90	75	70	3	82	21	51	3	
11	x	23											
14	x	30											
19	x	40											
11	x	23	200	135	120	100	92	5	100	21	62	5	
14	x	30											
19	x	40											
24	x	50											
28	x	60											

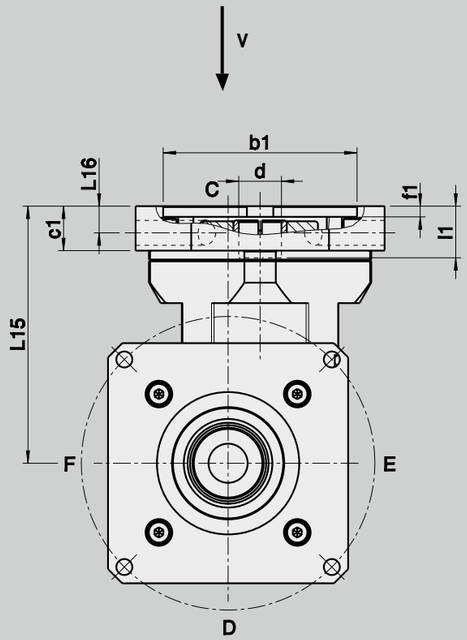

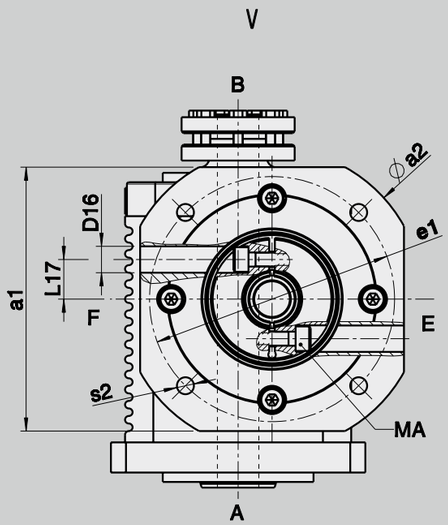

Gearbox dimensions											
d	**x**	**l1**	**Size**	**l15**	**l16**	**l17**	**c1**	**f1**	**D16**	**Screw type**	**MA**
G7											(Nm)
9	x	20	050	98.5	9,5	10	16	4,5	8,5	M6 / 12,9	18
11	x	23		98.5	9,5	10	16	4,5	8,5	M6 / 12,9	18
14	x	30		98.5	9,5	10	16	4,5	8,5	M6 / 12,9	18
9	x	20	100	125	13	12,5	22	5	10	M6 / 12,9	18
11	x	23		125	13	12,5	22	5	10	M6 / 12,9	18
14	x	30		125	13	12,5	22	5	10	M6 / 12,9	18
19	x	40		125	13	12,5	22	5	10	M6 / 12,9	18
11	x	23	200	145	15	16,5	25	5	14	M6 / 12,9	18
14	x	30		145	15	16,5	25	5	14	M6 / 12,9	18
19	x	40		145	15	16,5	25	5	14	M8 / 12,9	39
24	x	50		145	15	16,5	25	5	14	M8 / 12,9	43
28	x	60		145	15	16,5	25	5	14	M8 / 12,9	43

Motor dimensions																				
a1		75	75	75	75	90	95	95	95	95	95	115	125	125	125	125	130	140	140	200
a2		90	90	90	100	120	120	120	120	120	120	140	140	140	140	140	160	160	190	250
b1	G8	50	60	60	70	80	50	60	60	70	80	95	60	70	80	95	110	110	130	180
e1		70	75	75	85	100	70	75	75	85	100	115	75	85	100	115	130	130	165	215
s2		M5 x10	M5 x10	M6 x12	M6 x12	M6 x12	M5 x10	M5 x10	M6 x12	M6 x12	M6 x12	M8 x16	M5 x10	M6 x12	M6 x12	M8 x16	M8 x16	M8 x16	M10 x20	M12 x24
		-	Ø 5,5	-	Ø 7,0	Ø 7,0	-	Ø 5,5	-	Ø 7,0	Ø 7,0	Ø 9,0	-	-	-	Ø 9,0	Ø 9,0	Ø 9,0	Ø 11,0	-
		x	x	x	x	x						x						x		
		x	x	x	x	x						x						x		
		x	x	x	x	x						x						x		
							x	x	x	x	x	x					x		x	
							x	x	x	x	x	x					x		x	
							x	x	x	x	x	x					x		x	
							x	x	x	x	x	x					x		x	
													x	x	x	x	x		x	x
													x	x	x	x	x		x	x
													x	x	x	x	x		x	x
													x	x	x	x	x		x	x
													x	x	x	x	x		x	x

Technical specifications on this page and in the tables on the following pages are intended only for rough preselection.

Gear teeth: SKPR (N) 100 / 200 / 300
Klingelnberg spiral bevel toothing,
helical gear

Direction of rotation: The opposite direction when facing C and A

Efficiency:
Size 100 η ~0,95
Size 200 η ~0,95
Size 300 η ~0,95

Life time: 20000 h

Permissible gearbox temperature at housing: -10 °C to +90 °C

Lubrication: Lubricated for life

Mounting position: Please specify when ordering

Surface protection: Primer coat RAL 9005 Black

Protection rating: IP 54

SKPR (N)				100												
Ratio		i		12	15	20	25	30	35	40	45	50	63	70	80	100
Max. acceleration torque (max. 1000 cycles per hour)		T_{2bzul}	Nm	120	120	120	120	120	120	120	120	120	120	120	90	90
Nominal torque on output (with n_{1Nzul})		T_{2Nzul}	Nm	83	83	83	83	83	83	83	83	83	83	83	58	58
Emergency stop torque (permissible 1000 times during gearbox life time)		$T_{2Notzul}$	Nm	275	275	275	275	275	275	275	275	275	275	275	220	220
Permissible average input speed (with T_{2Nzul} and 20 °C ambient temperature)		n_{1mzul}	min^{-1}	2800	2800	2800	2800	2800	2800	2800	2800	2800	2800	2800	3100	3100
Max. input speed		$n_{1maxzul}$	min^{-1}	6000												
Max. backlash*		j	arcmin	standard ≤ 5 / reduced ≤ 3												
Torsional rigidity▲		C	Nm/arcmin	11												
Max. radial load** (with reference to shaft centre on output shaft)		F_{2rzul}	N	4000												
Max. axial load** (with reference to shaft centre on output shaft)		F_{2azul}	N	3350												
Weight		m	kg	approx. 7												
Running noise (with n_1 = 3000 min^{-1} without load)		L_{PA}	dB(A)	approx. 64 / distance of 1 m												
Inertia (with reference to input)	Ø d 9	J_1	$kgcm^2$	0,99	0,58	0,58	0,58	0,58	0,58	0,58	0,58	0,58	0,48	0,48	0,42	0,42
	Ø d 11	J_1	$kgcm^2$	1,03	0,62	0,62	0,62	0,62	0,62	0,62	0,62	0,62	0,52	0,52	0,47	0,47
	Ø d 14	J_1	$kgcm^2$	1,07	0,76	0,76	0,76	0,76	0,76	0,76	0,76	0,76	0,67	0,67	0,62	0,62

▲ with reference to output
* measured with 2 % nominal torque on output shaft
** charge centre of output shaft at output speed 250 min^{-1}. Please contact us for combined load applications

The following technical specifications in the table are intended only for rough preselection

SKPR (N)				200												
Ratio		i		12	15	20	25	30	35	40	45	50	63	70	80	100
Max. acceleration torque (max. 1000 cycles per hour)		T_{2bzul}	Nm	330	330	330	330	330	330	330	330	330	300	300	235	235
Nominal torque on output (with n_{1Nzul})		T_{2Nzul}	Nm	135	200	200	200	200	200	200	200	200	190	190	135	135
Emergency stop torque (permissible 1000 times during gearbox life time)		$T_{2Notzul}$	Nm	500	690	690	690	690	690	690	690	690	640	640	550	550
Permissible average input speed (with T_{2Nzul} and 20 °C ambient temperature)		n_{1mzul}	min^{-1}	2500	2500	2500	2500	2500	2500	2500	2500	2500	2800	2800	2800	2800
Max. input speed		$n_{1maxzul}$	min^{-1}	4500												
Max. backlash*		j	arcmin	standard ≤ 5 / reduced ≤ 3												
Torsional rigidity▲		C	Nm/arcmin	30												
Max. radial load** (with reference to shaft centre on output shaft)		F_{2rzul}	N	6300												
Max. axial load** (with reference to shaft centre on output shaft)		F_{2azul}	N	5650												
Weight		m	kg	approx. 15												
Running noise (with n_1 = 3000 min^{-1} without load)		L_{PA}	dB(A)	approx. 64 / distance of 1 m												
Inertia (with reference to input)	Ø d 9	J_1	$kgcm^2$	1,72	1,72	1,40	1,40	1,40	1,40	1,40	1,40	1,40	1,27	1,27	1,16	1,16
	Ø d 11	J_1	$kgcm^2$	1,85	1,85	1,47	1,47	1,47	1,47	1,47	1,47	1,47	1,32	1,32	1,20	1,20
	Ø d 14	J_1	$kgcm^2$	1,97	1,98	1,53	1,53	1,53	1,53	1,53	1,53	1,53	1,39	1,39	1,27	1,27
	Ø d 19	J_1	$kgcm^2$	2,06	2,06	1,65	1,65	1,65	1,65	1,65	1,65	1,65	1,42	1,42	1,31	1,31

SKPR (N)				300												
Ratio		i		12	15	20	25	30	35	40	45	50	63	70	80	100
Max. acceleration torque (max. 1000 cycles per hour)		T_{2bzul}	Nm	660	660	660	660	660	660	660	660	660	600	600	480	480
Nominal torque on output (with n_{1Nzul})		T_{2Nzul}	Nm	390	390	390	390	390	390	390	390	390	390	390	245	245
Emergency stop torque (permissible 1000 times during gearbox life time)		$T_{2Notzul}$	Nm	1400	1400	1400	1400	1400	1400	1400	1400	1400	1400	1400	1100	1100
Permissible average input speed (with T_{2Nzul} and 20 °C ambient temperature)		n_{1mzul}	min^{-1}	2100	2100	2100	2100	2100	2100	2100	2100	2100	2300	2300	2600	2600
Max. input speed		$n_{1maxzul}$	min^{-1}	4000												
Max. backlash*		j	arcmin	standard ≤ 5 / reduced ≤ 3												
Torsional rigidity▲		C	Nm/arcmin	60												
Max. radial load** (with reference to shaft centre on output shaft)		F_{2rzul}	N	9450												
Max. axial load** (with reference to shaft centre on output shaft)		F_{2azul}	N	9870												
Weight		m	kg	approx. 28												
Running noise (with n_1 = 3000 min^{-1} without load)		L_{PA}	dB(A)	approx. 66 / distance of 1 m												
Inertia (with reference to input)	Ø d 11	J_1	$kgcm^2$	7,01	6,95	6,95	6,95	6,95	6,95	6,95	6,95	6,95	4,45	4,45	4,35	4,35
	Ø d 14	J_1	$kgcm^2$	7,25	7,15	7,15	7,15	7,15	7,15	7,15	7,15	7,15	4,52	4,52	4,39	4,39
	Ø d 19	J_1	$kgcm^2$	7,36	7,28	7,28	7,28	7,28	7,28	7,28	7,28	7,28	4,61	4,61	4,43	4,43
	Ø d 24	J_1	$kgcm^2$	7,50	7,35	7,35	7,35	7,35	7,35	7,35	7,35	7,35	4,66	4,66	4,46	4,46
	Ø d 28	J_1	$kgcm^2$	7,65	7,50	7,50	7,50	7,50	7,50	7,50	7,50	7,50	4,75	4,75	4,55	4,55

▲ with reference to output
* measured with 2 % nominal torque on output shaft
** charge centre of output shaft at output speed 250 min^{-1}. Please contact us for combined load applications

SKPR (N) 04

TECHNICAL DATA

Technical specifications on this page and in the tables on the following pages are intended only for rough preselection.

Gear teeth: SKPR (N) 04
Klingelnberg spiral bevel toothing, spur gear

Direction of rotation: The opposite direction when facing C and A

Efficiency: Size 04 η ~0,92

Life time: 20000 h

Permissible gearbox temperature at housing: -10 °C to +90 °C

Lubrication: Lubricated for life

Mounting position: Please specify when ordering

Surface protection: Primer coat RAL 9005 Black

Protection rating: IP 54

▲ with reference to output
* measured with 2 % nominal torque on output shaft
** charge centre of output shaft at output speed 250 min^{-1}. Please contact us for combined load applications

SKPR (N) 04

TECHNICAL DATA

The following technical specifications in the table are intended only for rough preselection

SKPR (N)				04												
Ratio		i		12	15	20	25	30	35	40	45	50	63	70	80	100
Max. acceleration torque (max. 1000 cycles per hour)		T_{2bzul}	Nm	925	925	925	925	680	950	680	675	675	940	940	880	880
Nominal torque on output (with n_{1Nzul})		T_{2Nzul}	Nm	550	550	550	550	500	550	500	450	450	550	550	340	340
Emergency stop torque (permissible 1000 times during gearbox life time)		$T_{2Notzul}$	Nm	1250	1250	1250	1250	910	1270	910	800	800	1260	1260	1800	1800
Permissible average input speed (with T_{2Nzul} and 20 °C ambient temperature)		n_{1mzul}	min^{-1}	4000												
Max. input speed		$n_{1maxzul}$	min^{-1}	6500												
Max. backlash*		j	arcmin	standard ≤ 5 / reduced ≤ 3												
Torsional rigidity▲		C	Nm/arcmin	140												
Max. radial load** (with reference to shaft centre on output shaft)		F_{2rzul}	N	14000												
Max. axial load** (with reference to shaft centre on output shaft)		F_{2azul}	N	13500												
Weight		m	kg	approx. 33,5												
Running noise (with n_1 = 3000 min^{-1} without load)		L_{PA}	dB(A)	approx. 70 / distance of 1 m												
Inertia (with reference to input)	Ø d 11	J_1	$kgcm^2$	7,40	7,18	5,76	5,14	4,82	4,62	4,50	4,39	4,33	4,37	4,31	4,46	4,30
	Ø d 14	J_1	$kgcm^2$	7,40	7,18	5,76	5,14	4,82	4,62	4,50	4,39	4,33	4,37	4,31	4,46	4,30
	Ø d 19	J_1	$kgcm^2$	7,40	7,18	5,76	5,14	4,82	4,62	4,50	4,39	4,33	4,37	4,31	4,46	4,30
	Ø d 24	J_1	$kgcm^2$	7,40	7,18	5,76	5,14	4,82	4,62	4,50	4,39	4,33	4,37	4,31	4,46	4,30
	Ø d 28	J_1	$kgcm^2$	7,40	7,18	5,76	5,14	4,82	4,62	4,50	4,39	4,33	4,37	4,31	4,46	4,30

▲ with reference to output
* measured with 2 % nominal torque on output shaft
** charge centre of output shaft at output speed 250 min^{-1}. Please contact us for combined load applications

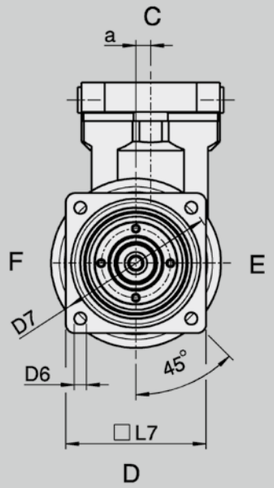

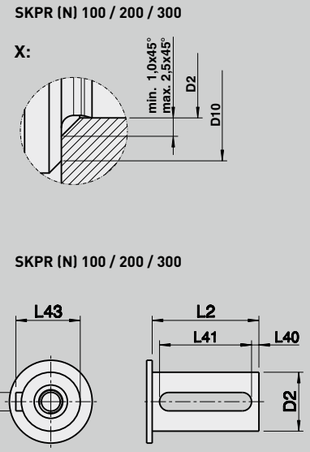

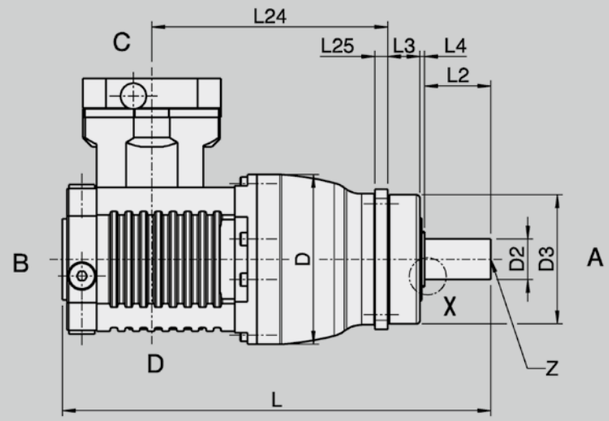

Design SKPR(N), output shaft with keyway DIN 6885

d	x	l1	Size	D	D2	D3	D6	D7	D10	a	L	L2	L3	L4
G7					k6	g6								
9	x	20	100	94	22	70	6,6	85	27	8	233	36	17,5	2,5
11	x	23												
14	x	30												
9	x	20	200	120	32	90	9	120	42	12	296	58	27	3
11	x	23												
14	x	30												
19	x	40												
11	x	23	300	154	40	130	11	165	61	18	377	82	27	3
14	x	30												
19	x	40												
24	x	50												
28	x	60												

								SKPR (N) = with key			
d	x	l1	Size	L7	L24	L25	Z DIN 332	L40	L41	L42	L43
G7											
9	x	20	100	76	128	7	DM8	2	32	6	24,5
11	x	23									
14	x	30									
9	x	20	200	101	154	10	DM12	4	50	10	35
11	x	23									
14	x	30									
19	x	40									
11	x	23	300	141	198	12	DM16	5	70	12	43
14	x	30									
19	x	40									
24	x	50									
28	x	60									

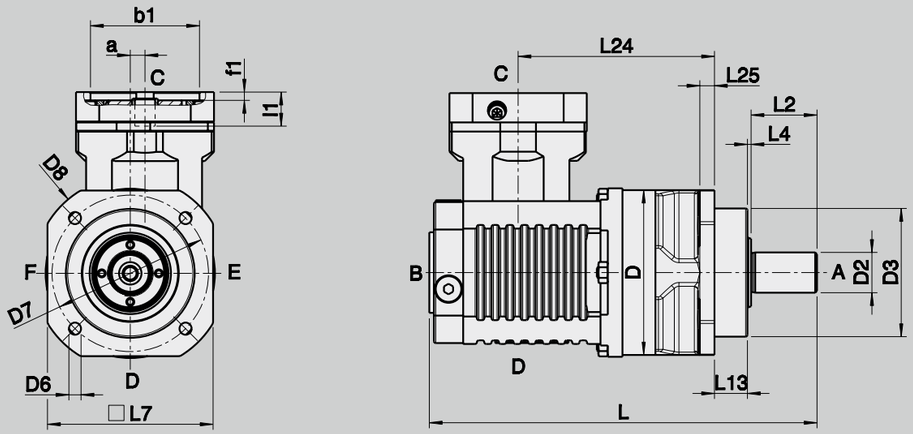

Design SKPR(N), output shaft with keyway DIN 6885

d	x	l1	Size	D2	D3	D6	D7	D8	D	a	L	L2
G7				k6	g6							
11	x	23	04	55	160	13	215	245	185	18	375,5	82
14	x	30										
19	x	40										
24	x	50										
28	x	60										

d	x	l1	Size	L4	L7	L13	L24	L25
G7								
11	x	23	04	3	180	27	196,5	15
14	x	30						
19	x	40						
24	x	50						
28	x	60						

Technical specifications on this page and in the tables on the following pages are intended only for rough preselection.

Gear teeth: SKPRW 100 / 200 / 300
Klingelnberg spiral bevel toothing,
helical gear

Direction of rotation: The opposite direction when facing C and A

Efficiency: Size 100 η ~0,95
Size 200 η ~0,95
Size 300 η ~0,95

Life time: 20000 h

Permissible gearbox temperature at housing: -10 °C to +90 °C

Lubrication: Lubricated for life

Mounting position: Please specify when ordering

Surface protection: Primer coat RAL 9005 Black

Protection rating: IP 54

SKPRW				100												
Ratio		i		12	15	20	25	30	35	40	45	50	63	70	80	100
Max. acceleration torque (max. 1000 cycles per hour)		T_{2bzul}	Nm	120	120	120	120	120	120	120	120	120	120	120	90	90
Nominal torque on output (with n_{1Nzul})		T_{2Nzul}	Nm	83	83	83	83	83	83	83	83	83	83	83	58	58
Emergency stop torque (permissible 1000 times during gearbox life time)		$T_{2Notzul}$	Nm	275	275	275	275	275	275	275	275	275	275	275	220	220
Permissible average input speed (with T_{2Nzul} and 20 °C ambient temperature)		n_{1mzul}	min^{-1}	2800	2800	2800	2800	2800	2800	2800	2800	2800	2800	2800	3100	3100
Max. input speed		$n_{1maxzul}$	min^{-1}	6000												
Max. backlash*		j	arcmin	standard ≤ 5 / reduced ≤ 3												
Torsional rigidity▲		C	Nm/arcmin	11												
Max. radial load** (with reference to shaft centre on output shaft)		F_{2rzul}	N	4000												
Max. axial load** (with reference to shaft centre on output shaft)		F_{2azul}	N	3350												
Weight		m	kg	approx. 7												
Running noise (with n_1 = 3000 min^{-1} without load)		L_{PA}	dB(A)	approx. 64 / distance of 1 m												
Inertia (with reference to input)	Ø d 9	J_1	$kgcm^2$	0,99	0,58	0,58	0,58	0,58	0,58	0,58	0,58	0,58	0,48	0,48	0,42	0,42
	Ø d 11	J_1	$kgcm^2$	1,03	0,62	0,62	0,62	0,62	0,62	0,62	0,62	0,62	0,52	0,52	0,47	0,47
	Ø d 14	J_1	$kgcm^2$	1,07	0,76	0,76	0,76	0,76	0,76	0,76	0,76	0,76	0,67	0,67	0,62	0,62

▲ with reference to output
* measured with 2 % nominal torque on output shaft
** charge centre of output shaft at output speed 250 min^{-1}. Please contact us for combined load applications

SKPRW 100 / 200 / 300
TECHNICAL DATA

SKPRW				200												
Ratio		i		12	15	20	25	30	35	40	45	50	63	70	80	100
Max. acceleration torque (max. 1000 cycles per hour)		T_{2bzul}	Nm	330	330	330	330	330	330	330	330	330	300	300	235	235
Nominal torque on output (with n_{1Nzul})		T_{2Nzul}	Nm	135	200	200	200	200	200	200	200	200	190	190	135	135
Emergency stop torque (permissible 1000 times during gearbox life time)		$T_{2Notzul}$	Nm	500	690	690	690	690	690	690	690	690	640	640	550	550
Permissible average input speed (with T_{2Nzul} and 20 °C ambient temperature)		n_{1mzul}	min^{-1}	2500	2500	2500	2500	2500	2500	2500	2500	2500	2800	2800	2800	2800
Max. input speed		$n_{1maxzul}$	min^{-1}	4500												
Max. backlash*		j	arcmin	standard ≤ 5 / reduced ≤ 3												
Torsional rigidity▲		C	Nm/arcmin	30												
Max. radial load** (with reference to shaft centre on output shaft)		F_{2rzul}	N	6300												
Max. axial load** (with reference to shaft centre on output shaft)		F_{2azul}	N	5650												
Weight		m	kg	approx. 15												
Running noise (with n_1 = 3000 min^{-1} without load)		L_{PA}	dB(A)	approx. 64 / distance of 1 m												
Inertia (with reference to input)	Ø d 9	J_1	$kgcm^2$	1,72	1,72	1,40	1,40	1,40	1,40	1,40	1,40	1,40	1,27	1,27	1,16	1,16
	Ø d 11	J_1	$kgcm^2$	1,85	1,85	1,47	1,47	1,47	1,47	1,47	1,47	1,47	1,32	1,32	1,20	1,20
	Ø d 14	J_1	$kgcm^2$	1,97	1,98	1,53	1,53	1,53	1,53	1,53	1,53	1,53	1,39	1,39	1,27	1,27
	Ø d 19	J_1	$kgcm^2$	2,06	2,06	1,65	1,65	1,65	1,65	1,65	1,65	1,65	1,42	1,42	1,31	1,31

SKPRW				300												
Ratio		i		12	15	20	25	30	35	40	45	50	63	70	80	100
Max. acceleration torque (max. 1000 cycles per hour)		T_{2bzul}	Nm	660	660	660	660	660	660	660	660	660	600	600	480	480
Nominal torque on output (with n_{1Nzul})		T_{2Nzul}	Nm	390	390	390	390	390	390	390	390	390	390	390	245	245
Emergency stop torque (permissible 1000 times during gearbox life time)		$T_{2Notzul}$	Nm	1400	1400	1400	1400	1400	1400	1400	1400	1400	1400	1400	1100	1100
Permissible average input speed (with T_{2Nzul} and 20 °C ambient temperature)		n_{1mzul}	min^{-1}	2100	2100	2100	2100	2100	2100	2100	2100	2100	2300	2300	2600	2600
Max. input speed		$n_{1maxzul}$	min^{-1}	4000												
Max. backlash*		j	arcmin	standard ≤ 5 / reduced ≤ 3												
Torsional rigidity▲		C	Nm/arcmin	60												
Max. radial load** (with reference to shaft centre on output shaft)		F_{2rzul}	N	9450												
Max. axial load** (with reference to shaft centre on output shaft)		F_{2azul}	N	9870												
Weight		m	kg	approx. 28												
Running noise (with n_1 = 3000 min^{-1} without load)		L_{PA}	dB(A)	approx. 66 / distance of 1 m												
Inertia (with reference to input)	Ø d 11	J_1	$kgcm^2$	7,01	6,95	6,95	6,95	6,95	6,95	6,95	6,95	6,95	4,45	4,45	4,35	4,35
	Ø d 14	J_1	$kgcm^2$	7,25	7,15	7,15	7,15	7,15	7,15	7,15	7,15	7,15	4,52	4,52	4,39	4,39
	Ø d 19	J_1	$kgcm^2$	7,36	7,28	7,28	7,28	7,28	7,28	7,28	7,28	7,28	4,61	4,61	4,43	4,43
	Ø d 24	J_1	$kgcm^2$	7,50	7,35	7,35	7,35	7,35	7,35	7,35	7,35	7,35	4,66	4,66	4,46	4,46
	Ø d 28	J_1	$kgcm^2$	7,65	7,50	7,50	7,50	7,50	7,50	7,50	7,50	7,50	4,75	4,75	4,55	4,55

▲ with reference to output
* measured with 2 % nominal torque on output shaft
** charge centre of output shaft at output speed 250 min^{-1}. Please contact us for combined load applications

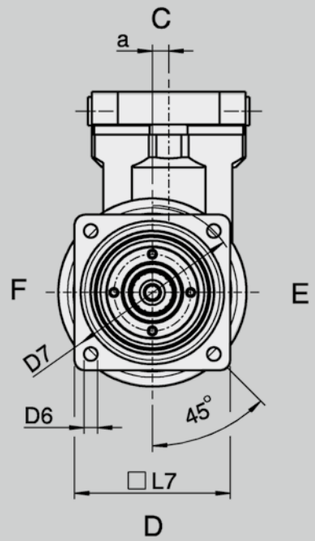

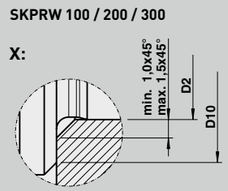

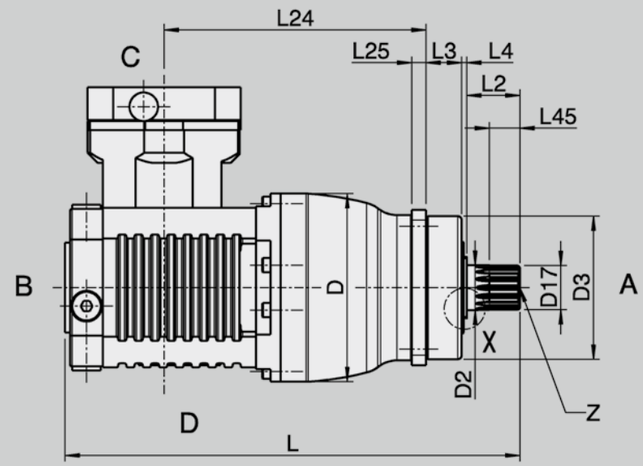

d	x	l1	Size	D	D2	D3	D6	D7	D10	D17 DIN 5480
G7					k6	g6				
9	x	20	100	94	22	70	6,6	85	27	W 22 x 1,25 x 30 x 24 x 6m
11	x	23								
14	x	30								
9	x	20	200	120	32	90	9	120	42	W 32 x 1,25 x 30 x 24 x 6m
11	x	23								
14	x	30								
19	x	40								
11	x	23	300	152	40	130	11	165	61	W 40 x 2 x 30 x 18 x 6m
14	x	30								
19	x	40								
24	x	50								
28	x	60								

d	x	l1	Size	a	L	L2	L3	L4	L7	L24	L25	L45	Z DIN 332
G7													
9	x	20	100	8	215	26	17,5	2,5	76	128	7	15	D M8
11	x	23											
14	x	30											
9	x	20	200	12	264	26	27	3	101	154	10	15	D M12
11	x	23											
14	x	30											
19	x	40											
11	x	23	300	18	335	40	27	3	141	198	12	20	D M16
14	x	30											
19	x	40											
24	x	50											
28	x	60											

Technical specifications on this page and in the tables on the following pages are intended only for rough preselection.

Gear teeth: SKPRW 100 / 200 / 300
Klingelnberg spiral bevel toothing,
helical gear

Direction of rotation: The opposite direction when facing C and A

Efficiency:
Size 100 η ~0,95
Size 200 η ~0,95
Size 300 η ~0,95

Life time: 20000 h

Permissible gearbox temperature at housing: -10 °C to +90 °C

Lubrication: Lubricated for life

Mounting position: Please specify when ordering

Surface protection: Primer coat RAL 9005 Black

Protection rating: IP 54

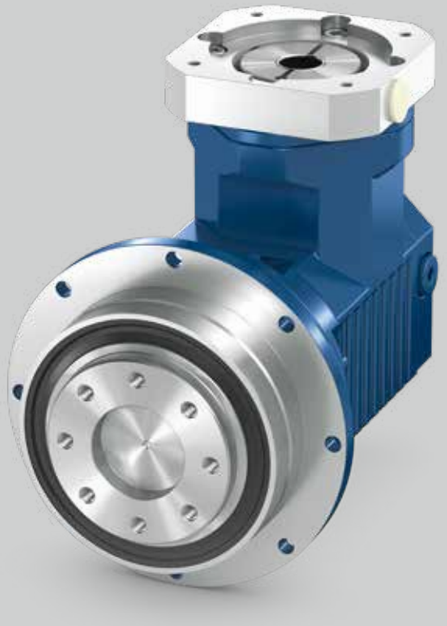

SKPG				100												
Ratio		i		12	15	20	25	30	35	40	45	50	63	70	80	100
Max. acceleration torque (max. 1000 cycles per hour)		T_{2bzul}	Nm	120	120	120	120	120	120	120	120	120	120	120	90	90
Nominal torque on output (with n_{1Nzul})		T_{2Nzul}	Nm	83	83	83	83	83	83	83	83	83	83	83	58	58
Emergency stop torque (permissible 1000 times during gearbox life time)		$T_{2Notzul}$	Nm	275	275	275	275	275	275	275	275	275	275	275	220	220
Permissible average input speed (with T_{2Nzul} and 20 °C ambient temperature)		n_{1mzul}	min^{-1}	2800	2800	2800	2800	2800	2800	2800	2800	2800	2800	2800	3100	3100
Max. input speed		$n_{1maxzul}$	min^{-1}	6000												
Max. backlash*		j	arcmin	standard ≤ 5 / reduced ≤ 3												
Torsional rigidity▲		C	Nm/arcmin	–												
Max. radial load** (with reference to shaft centre on output shaft)		F_{2rzul}	N	–												
Max. axial load** (with reference to shaft centre on output shaft)		F_{2azul}	N	3600												
Weight		m	kg	approx. 5,5												
Running noise (with n_1 = 3000 min^{-1} without load)		L_{PA}	dB(A)	approx. 64 / distance of 1 m												
Inertia (with reference to input)	Ø d 9	J_1	$kgcm^2$	0,69	0,69	0,69	0,69	0,69	0,69	0,69	0,69	0,69	0,50	0,50	0,44	0,44
	Ø d 11	J_1	$kgcm^2$	0,86	0,86	0,86	0,86	0,86	0,86	0,86	0,86	0,86	0,54	0,54	0,46	0,46
	Ø d 14	J_1	$kgcm^2$	0,90	0,90	0,90	0,90	0,90	0,90	0,90	0,90	0,90	0,57	0,57	0,50	0,50

▲ bezogen auf den Abtrieb
* gemessen mit 2 % vom Nenndrehmoment am Abtrieb
** Angriff Mitte Abtriebswelle bei Abtriebsdrehzahl 250 min^{-1}. Bei kombinierten Belastungen bitten wir um Rücksprache

The following technical specifications in the table are intended only for rough preselection

SKPG				200												
Ratio		i		12	15	20	25	30	35	40	45	50	63	70	80	100
Max. acceleration torque (max. 1000 cycles per hour)		T_{2bzul}	Nm	330	330	330	330	330	330	330	330	330	300	300	235	235
Nominal torque on output (with n_{1Nzul})		T_{2Nzul}	Nm	230	230	230	230	230	230	230	230	230	190	190	135	135
Emergency stop torque (permissible 1000 times during gearbox life time)		$T_{2Notzul}$	Nm	690	690	690	690	690	690	690	690	690	640	640	550	550
Permissible average input speed (with T_{2Nzul} and 20 °C ambient temperature)		n_{1mzul}	min^{-1}	2500	2500	2500	2500	2500	2500	2500	2500	2500	2800	2800	2800	2800
Max. input speed		$n_{1maxzul}$	min^{-1}	4500												
Max. backlash*		j	arcmin	standard ≤ 5 / reduced ≤ 3												
Torsional rigidity▲		C	Nm/arcmin	–												
Max. radial load** (with reference to shaft centre on output shaft)		F_{2rzul}	N	–												
Max. axial load** (with reference to shaft centre on output shaft)		F_{2azul}	N	4200												
Weight		m	kg	approx. 11												
Running noise (with n_1 = 3000 min^{-1} without load)		L_{PA}	dB(A)	approx. 64 / distance of 1 m												
Inertia (with reference to input)	Ø d 9	J_1	$kgcm^2$	1,78	1,78	1,78	1,78	1,78	1,78	1,78	1,78	1,78	1,15	1,15	1,14	1,14
	Ø d 11	J_1	$kgcm^2$	1,85	1,85	1,85	1,85	1,85	1,85	1,85	1,85	1,85	1,18	1,18	1,16	1,16
	Ø d 14	J_1	$kgcm^2$	1,90	1,90	1,90	1,90	1,90	1,90	1,90	1,90	1,90	1,21	1,21	1,19	1,19
	Ø d 19	J_1	$kgcm^2$	1,95	1,95	1,95	1,95	1,95	1,95	1,95	1,95	1,95	1,25	1,25	1,23	1,23

SKPG				300												
Ratio		i		12	15	20	25	30	35	40	45	50	63	70	80	100
Max. acceleration torque (max. 1000 cycles per hour)		T_{2bzul}	Nm	660	660	660	660	660	660	660	660	660	600	600	480	480
Nominal torque on output (with n_{1Nzul})		T_{2Nzul}	Nm	390	390	390	390	390	390	390	390	390	390	390	245	245
Emergency stop torque (permissible 1000 times during gearbox life time)		$T_{2Notzul}$	Nm	1400	1400	1400	1400	1400	1400	1400	1400	1400	1400	1400	1100	1100
Permissible average input speed (with T_{2Nzul} and 20 °C ambient temperature)		n_{1mzul}	min^{-1}	2100	2100	2100	2100	2100	2100	2100	2100	2100	2300	2300	2600	2600
Max. input speed		$n_{1maxzul}$	min^{-1}	4000												
Max. backlash*		j	arcmin	standard ≤ 5 / reduced ≤ 3												
Torsional rigidity▲		C	Nm/arcmin	–												
Max. radial load** (with reference to shaft centre on output shaft)		F_{2rzul}	N	–												
Max. axial load** (with reference to shaft centre on output shaft)		F_{2azul}	N	8000												
Weight		m	kg	approx. 25												
Running noise (with n_1 = 3000 min^{-1} without load)		L_{PA}	dB(A)	approx. 66 / distance of 1 m												
Inertia (with reference to input)	Ø d 11	J_1	$kgcm^2$	7,17	7,17	7,17	7,17	7,17	7,17	7,17	7,17	7,17	4,46	4,46	4,30	4,30
	Ø d 14	J_1	$kgcm^2$	7,35	7,35	7,35	7,35	7,35	7,35	7,35	7,35	7,35	4,75	4,75	4,43	4,43
	Ø d 19	J_1	$kgcm^2$	7,66	7,66	7,66	7,66	7,66	7,66	7,66	7,66	7,66	4,90	4,90	4,55	4,55
	Ø d 24	J_1	$kgcm^2$	7,75	7,75	7,75	7,75	7,75	7,75	7,75	7,75	7,75	5,05	5,05	4,75	4,75
	Ø d 28	J_1	$kgcm^2$	7,88	7,88	7,88	7,88	7,88	7,88	7,88	7,88	7,88	5,25	5,25	4,99	4,99

▲ bezogen auf den Abtrieb
* gemessen mit 2 % vom Nenndrehmoment am Abtrieb
** Angriff Mitte Abtriebswelle bei Abtriebsdrehzahl 250 min^{-1}. Bei kombinierten Belastungen bitten wir um Rücksprache

SKPG 04

TECHNICAL DATA

Technical specifications on this page and in the tables on the following pages are intended only for rough preselection.

Gear teeth: SKPG 04
Klingelnberg spiral bevel toothing,
spur gear

Direction of rotation: The opposite direction when facing C and A

Efficiency: Size 04 η ~0,92

Life time: 20000 h

Permissible gearbox temperature at housing: -10 °C to +90 °C

Lubrication: Lubricated for life

Mounting position: Please specify when ordering

Surface protection: Primer coat RAL 9005 Black

Protection rating: IP 54

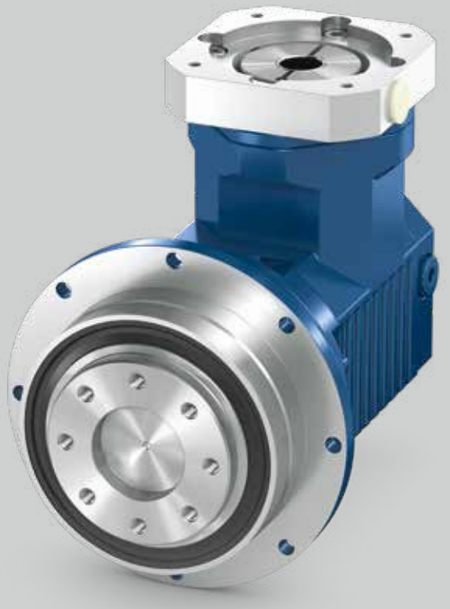

▲ with reference to output
* measured with 2 % nominal torque on output shaft
** charge centre of output shaft at output speed 250 min^{-1}. Please contact us for combined load applications

SKPG 04

TECHNICAL DATA

The following technical specifications in the table are intended only for rough preselection

SKPG				04												
Ratio		i		12	15	20	25	30	35	40	45	50	63	70	80	100
Max. acceleration torque (max. 1000 cycles per hour)		T_{2bzul}	Nm	925	925	925	925	680	950	680	675	675	940	940	880	880
Nominal torque on output (with n_{1Nzul})		T_{2Nzul}	Nm	550	550	550	550	500	550	500	450	450	550	550	340	340
Emergency stop torque (permissible 1000 times during gearbox life time)		$T_{2Notzul}$	Nm	1250	1250	1250	1250	910	1270	910	800	800	1260	1260	1800	1800
Permissible average input speed (with T_{2Nzul} and 20 °C ambient temperature)		n_{1mzul}	min^{-1}	4000												
Max. input speed		$n_{1maxzul}$	min^{-1}	6500												
Max. backlash*		j	arcmin	standard ≤ 5 / reduced ≤ 3												
Torsional rigidity▲		C	Nm/arcmin	185												
Max. radial load** (with reference to shaft centre on output shaft)		F_{2rzul}	N	18070												
Max. axial load** (with reference to shaft centre on output shaft)		F_{2azul}	N	9100												
Weight		m	kg	approx. 31,5												
Running noise (with n_1 = 3000 min^{-1} without load)		L_{PA}	dB(A)	approx. 72 / distance of 1 m												
Inertia (with reference to input)	Ø d 11	J_1	$kgcm^2$	7,77	7,04	5,68	5,09	4,78	4,59	4,44	4,38	4,32	4,36	4,31	4,46	4,30
	Ø d 14	J_1	$kgcm^2$	7,77	7,04	5,68	5,09	4,78	4,59	4,44	4,38	4,32	4,36	4,31	4,46	4,30
	Ø d 19	J_1	$kgcm^2$	7,77	7,04	5,68	5,09	4,78	4,59	4,44	4,38	4,32	4,36	4,31	4,46	4,30
	Ø d 24	J_1	$kgcm^2$	7,77	7,04	5,68	5,09	4,78	4,59	4,44	4,38	4,32	4,36	4,31	4,46	4,30
	Ø d 28	J_1	$kgcm^2$	7,77	7,04	5,68	5,09	4,78	4,59	4,44	4,38	4,32	4,36	4,31	4,46	4,30

▲ with reference to output
* measured with 2 % nominal torque on output shaft
** charge centre of output shaft at output speed 250 min^{-1}. Please contact us for combined load applications

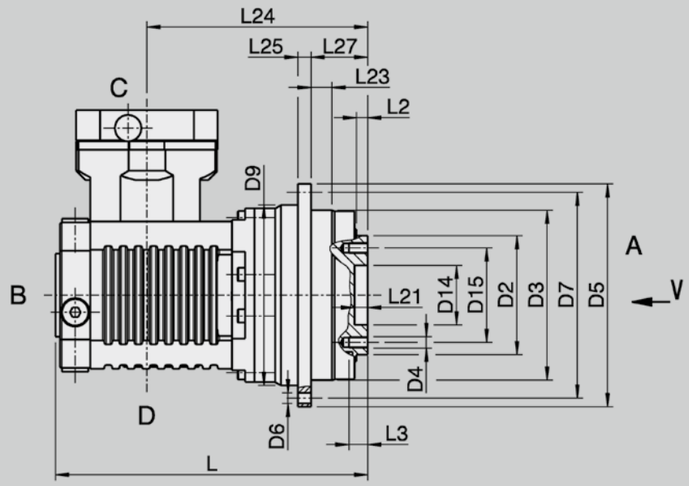

View V: SKPG 100

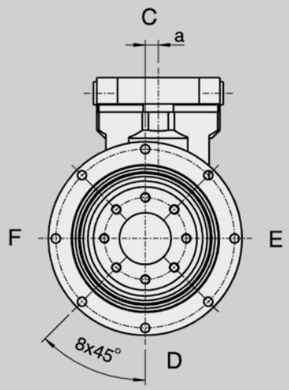

View V: SKPG 200

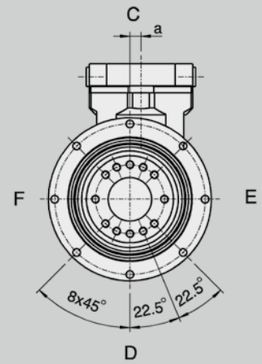

View V: SKPG 300

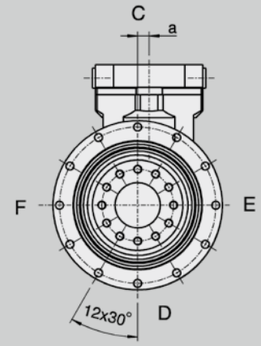

F7: Possible shaft diameters x length

d	x	l1	Size	D2	D3	D4	D5	D6	D7	D9	D14	D15
G7				k6	g6						H7	
9	x	20	100	63	90	M6	118	5,5	109	95,5	31,5	50
11	x	23										
14	x	30										
9	x	20	200	80	110	M6	145	5,5	135	120,5	40	63
11	x	23										
14	x	30										
19	x	40										
11	x	23	300	100	140	M8	179	6,6	168	152,5	50	80
14	x	30										
19	x	40										
24	x	50										
28	x	60										

d	x	l1	Size	a	L	L2	L3	L21	L23	L24	L25	L27
G7												
9	x	20	100	8	165,5	6	10	6	11	117	7	30
11	x	23										
14	x	30										
9	x	20	200	12	200	6,5	12	6,5	10	146	8	29
11	x	23										
14	x	30										
19	x	40										
1	x	23	300	18	246	6,5	16	6,5	14,5	179	10	38
14	x	30										
19	x	40										
24	x	50										
28	x	60										

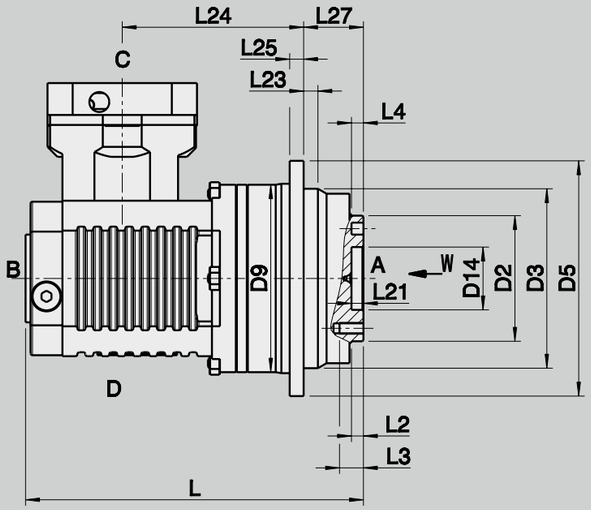

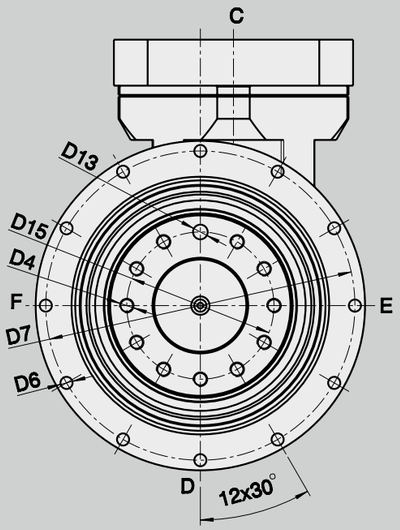

F7: Possible shaft diameters x length

d	x	l1	Size	D2	D3	D4	D5	D6	D7	D9	D13	D14	D15
G7				h7	h6						H7	H7	
11	x	23											
14	x	30											
19	x	40	04	130	170	M10	215	8,5	200	185	10	65	100
24	x	50											
28	x	60											

d	x	l1	Size	a	L	L2	L3	L21	L23	L24	L25	L27
G7												
11	x	23										
14	x	30										
19	x	40	04	18	260	20	10	8	12	148	12	45
24	x	50										
28	x	60										

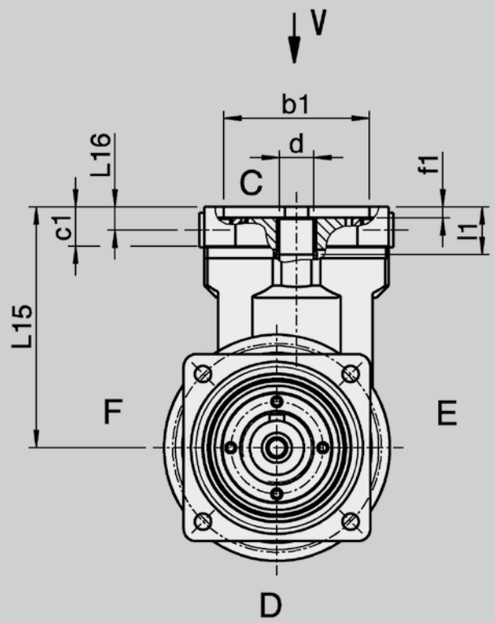

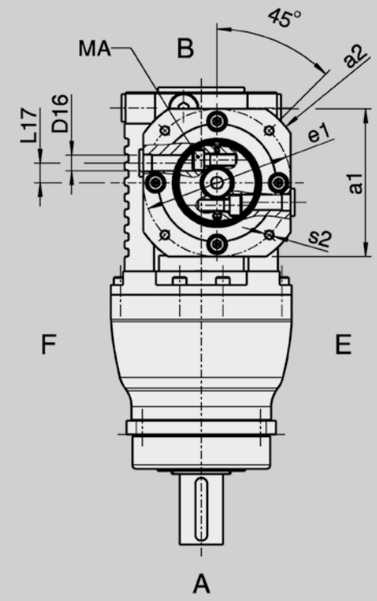

Gearbox dimensions

d	x	l1	Size	L15	L16	L17	c1	f1	D16	Screw type	MA
G7											Nm
9	x	20	100	98.5	9,5	10	16	4,5	8,5	M6 / 12,9	18
11	x	23		98.5	9,5	10	16	4,5	8,5	M6 / 12,9	18
14	x	30		98.5	9,5	10	16	4,5	8,5	M6 / 12,9	18
9	x	20	200	125	13	12,5	22	5	10	M6 / 12,9	18
11	x	23		125	13	12,5	22	5	10	M6 / 12,9	18
14	x	30		125	13	12,5	22	5	10	M6 / 12,9	18
19	x	40		125	13	12,5	22	5	10	M6 / 12,9	18
11	x	23	300	145	15	16,5	25	5	14	M6 / 12,9	18
14	x	30		145	15	16,5	25	5	14	M6 / 12,9	18
19	x	40		145	15	16,5	25	5	14	M6 / 12,9	39
24	x	50		145	15	16,5	25	5	14	M6 / 12,9	43
28	x	60		145	15	16,5	25	5	14	M6 / 12,9	43

Motor dimensions

a1		75	75	75	90	95	95	95	95	115	125	125	125	125	130	140	140	200
a2		90	90	100	120	120	120	120	120	140	140	140	140	140	160	160	190	250
b1	G8	50	60	70	80	50	60	70	80	95	60	70	80	95	110	110	130	180
e1		70	75	85	100	70	75	85	100	115	75	85	100	115	130	130	165	215
s2*		M5 x4	M5 x4	M6 x4	M6 x4	M5 x4	M5 x4	M6 x4	M6 x4	M8 x4	M5 x4	M6 x4	M6 x4	M8 x4	M8 x4	M8 x4	M10 x4	M12 x4
		-	Ø 5,5	Ø 7,0	Ø 7,0	-	Ø 5,5	Ø 7,0	Ø 7,0	Ø 9,0	-	-	-	Ø 9,0	Ø 9,0	Ø 9,0	Ø 11,0	-
		x	x	x	x					x						x		
		x	x	x	x					x						x		
		x	x	x	x					x						x		
						x	x	x	x	x					x		x	
						x	x	x	x	x					x		x	
						x	x	x	x	x					x		x	
						x	x	x	x	x					x		x	
											x	x	x	x	x		x	x
											x	x	x	x	x		x	x
											x	x	x	x	x		x	x
											x	x	x	x	x		x	x
											x	x	x	x	x		x	x

* Thread depth: 2 x Ø or flange thickness

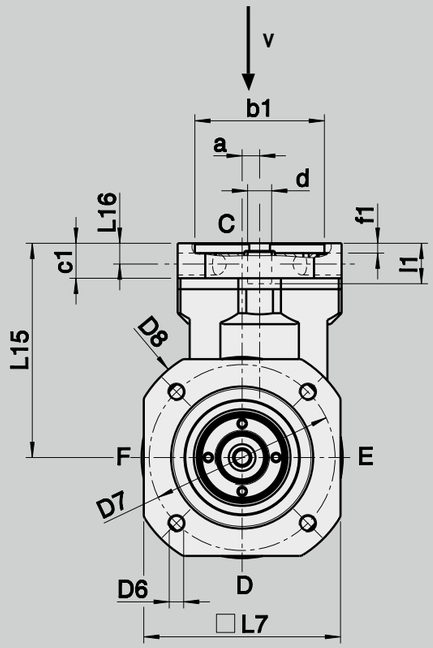

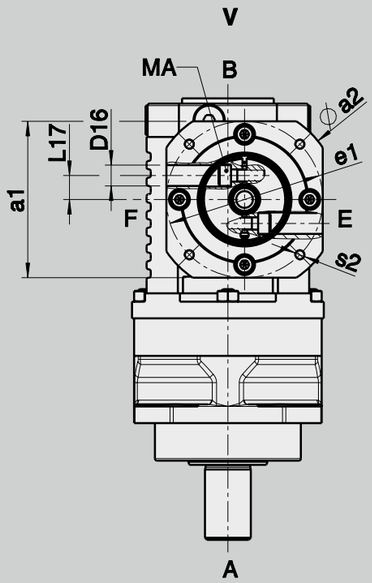

Gearbox dimensions											
d	**x**	**l1**	**Size**	**l15**	**l16**	**l17**	**c1**	**f1**	**D16**	**Screw type**	**MA**
G7											(Nm)
9	x	20	01	98.5	9,5	10	16	4,5	8,5	M6 / 12,9	18
11	x	23		98.5	9,5	10	16	4,5	8,5	M6 / 12,9	18
14	x	30		98.5	9,5	10	16	4,5	8,5	M6 / 12,9	18
9	x	20	02	125	13	12,5	22	5	10	M6 / 12,9	18
11	x	23		125	13	12,5	22	5	10	M6 / 12,9	18
14	x	30		125	13	12,5	22	5	10	M6 / 12,9	18
19	x	40		125	13	12,5	22	5	10	M6 / 12,9	18
11	x	23	03 / 04	145	15	16,5	25	5	14	M6 / 12,9	18
14	x	30		145	15	16,5	25	5	14	M6 / 12,9	18
19	x	40		145	15	16,5	25	5	14	M8 / 12,9	39
24	x	50		145	15	16,5	25	5	14	M8 / 12,9	43
28	x	60		145	15	16,5	25	5	14	M8 / 12,9	43

Motor dimensions																				
a1		75	75	75	75	90	95	95	95	95	115	125	125	125	125	125	130	140	140	200
a2		90	90	90	100	120	120	120	120	120	140	140	140	140	140	140	160	160	190	250
b1	G8	50	60	60	70	80	50	60	70	80	95	60	60	70	80	95	110	110	130	180
e1		70	75	75	85	100	70	75	85	100	115	75	75	85	100	115	130	130	165	215
s2		M5 x10	M5 x10	M6 x12	M6 x12	M6 x12	M5 x10	M5 x10	M6 x12	M6 x12	M8 x16	M5 x10	M6 x12	M6 x12	M6 x12	M8 x16	M8 x16	M8 x16	M10 x20	M12 x24
		-	Ø 5,5	-	Ø 7,0	Ø 7,0	-	Ø 5,5	Ø 7,0	Ø 7,0	Ø 9,0	-	-	-	-	Ø 9,0	Ø 9,0	Ø 9,0	Ø 11,0	-
		x	x	x	x	x					x							x		
		x	x	x	x	x					x							x		
		x	x	x	x	x					x							x		
							x	x	x	x	x		x				x		x	
							x	x	x	x	x		x				x		x	
							x	x	x	x	x		x				x		x	
							x	x	x	x	x		x				x		x	
												x		x	x	x	x		x	x
												x		x	x	x	x		x	x
												x		x	x	x	x		x	x
												x		x	x	x	x		x	x
												x		x	x	x	x		x	x

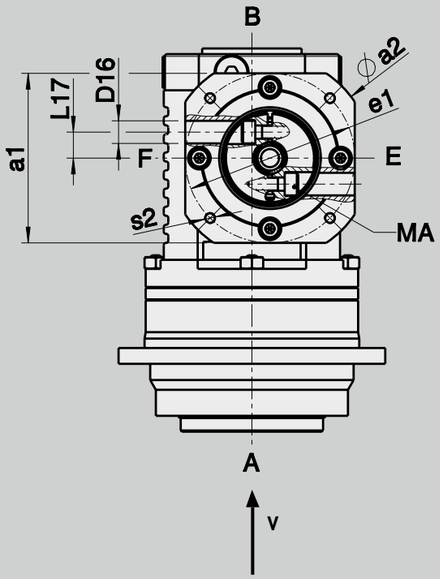

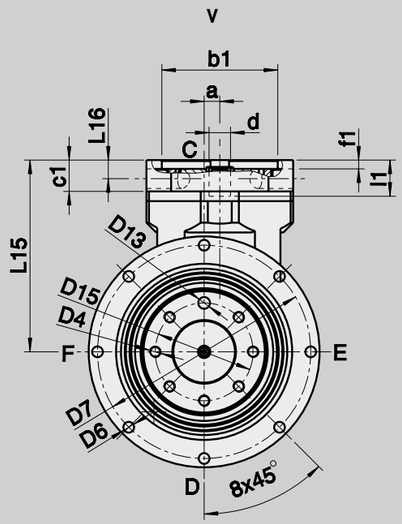

Motor dimensions

a1		75	75	75	75	90	95	95	95	95	115	125	125	125	125	125	130	140	140	200
a2		90	90	90	100	120	120	120	120	120	140	140	140	140	140	140	160	160	190	250
b1	G8	50	60	60	70	80	50	60	70	80	95	60	60	70	80	95	110	110	130	180
e1		70	75	75	85	100	70	75	85	100	115	75	75	85	100	115	130	130	165	215
s2		M5 x10	M5 x10	M6 x12	M6 x12	M6 x12	M5 x10	M5 x10	M6 x12	M6 x12	M8 x16	M5 x10	M6 x12	M6 x12	M6 x12	M8 x16	M8 x16	M8 x16	M10 x20	M12 x24
		-	Ø 5,5	-	Ø 7,0	Ø 7,0	-	Ø 5,5	Ø 7,0	Ø 7,0	Ø 9,0	-	-	-	-	Ø 9,0	Ø 9,0	Ø 9,0	Ø 11,0	-

Gearbox dimensions

d	x	l1	Size	L15	L16	L17	c1	f1	D16	Screw type	MA
G7											(Nm)
9	x	20	01	98.5	9,5	10	16	4,5	8,5	M6 / 12,9	18
11	x	23		98.5	9,5	10	16	4,5	8,5	M6 / 12,9	18
14	x	30		98.5	9,5	10	16	4,5	8,5	M6 / 12,9	18
9	x	20	02	125	13	12,5	22	5	10	M6 / 12,9	18
11	x	23		125	13	12,5	22	5	10	M6 / 12,9	18
14	x	30		125	13	12,5	22	5	10	M6 / 12,9	18
19	x	40		125	13	12,5	22	5	10	M6 / 12,9	18
11	x	23	03 / 04	145	15	16,5	25	5	14	M6 / 12,9	18
14	x	30		145	15	16,5	25	5	14	M6 / 12,9	18
19	x	40		145	15	16,5	25	5	14	M8 / 12,9	39
24	x	50		145	15	16,5	25	5	14	M8 / 12,9	43
28	x	60		145	15	16,5	25	5	14	M8 / 12,9	43

9	x	x	x	x	x					x								x		
11	x	x	x	x	x					x								x		
14	x	x	x	x	x					x								x		
9						x	x	x	x	x		x				x		x		
11						x	x	x	x	x		x				x		x		
14						x	x	x	x	x		x				x		x		
19						x	x	x	x	x		x				x		x		
11											x		x	x	x	x		x	x	
14											x		x	x	x	x		x	x	
19											x		x	x	x	x		x	x	
24											x		x	x	x	x		x	x	
28											x		x	x	x	x		x	x	

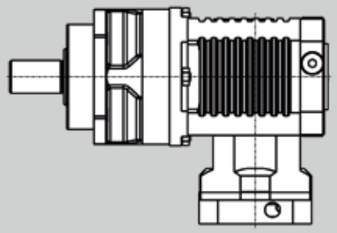

C

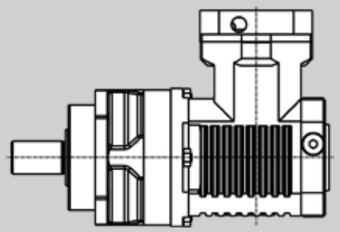

D

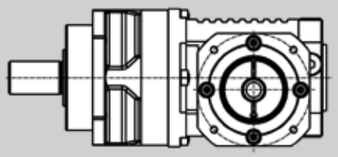

E

Mounting position:

Side view

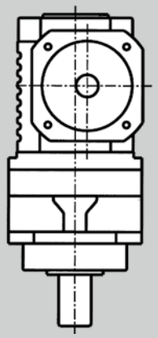

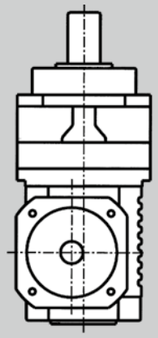

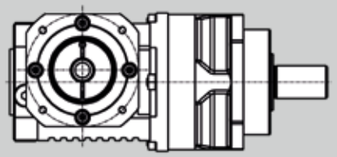

F

Mounting position: (underside)

A B

Mounting position C/D/E/F

The gearboxes have on the flange side B on all faces threaded plugs.
The breather screw is supplied loose and must be fitted upon installation.
See the following sketch.

Mounting position A/B

Attention! For mounting position "A/B" = underside consultation with Vogel Antriebstechnik is necessary.

SKPR (N) / SKPRW / SKPG
MOUNTING POSITION

Output Breather assembling:

1 = Breather
2 = Threaded plug

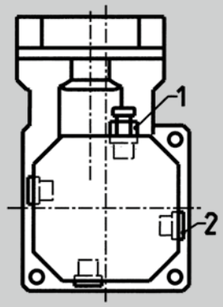

SPIRAL BEVEL GEARBOXES

The basic housing has a cubic shape, guaranteeing symmetrical dimensions. Centring possibilities have been included on all input and output sides. The housing and bearing flanges are made of high-grade grey cast iron, have been machined all-round and have fastening threads 2 x Ø.

The use of sturdy roller bearings ensures a long service life. The modular system allows a wide range of input and output modifications.

ML		
50	100	200
Page 104	Page 105	Page 105

MH		
50	100	200
Page 110	Page 111	Page 111

MH shrink disc		
50	100	200
Page 114	Page 114	Page 114

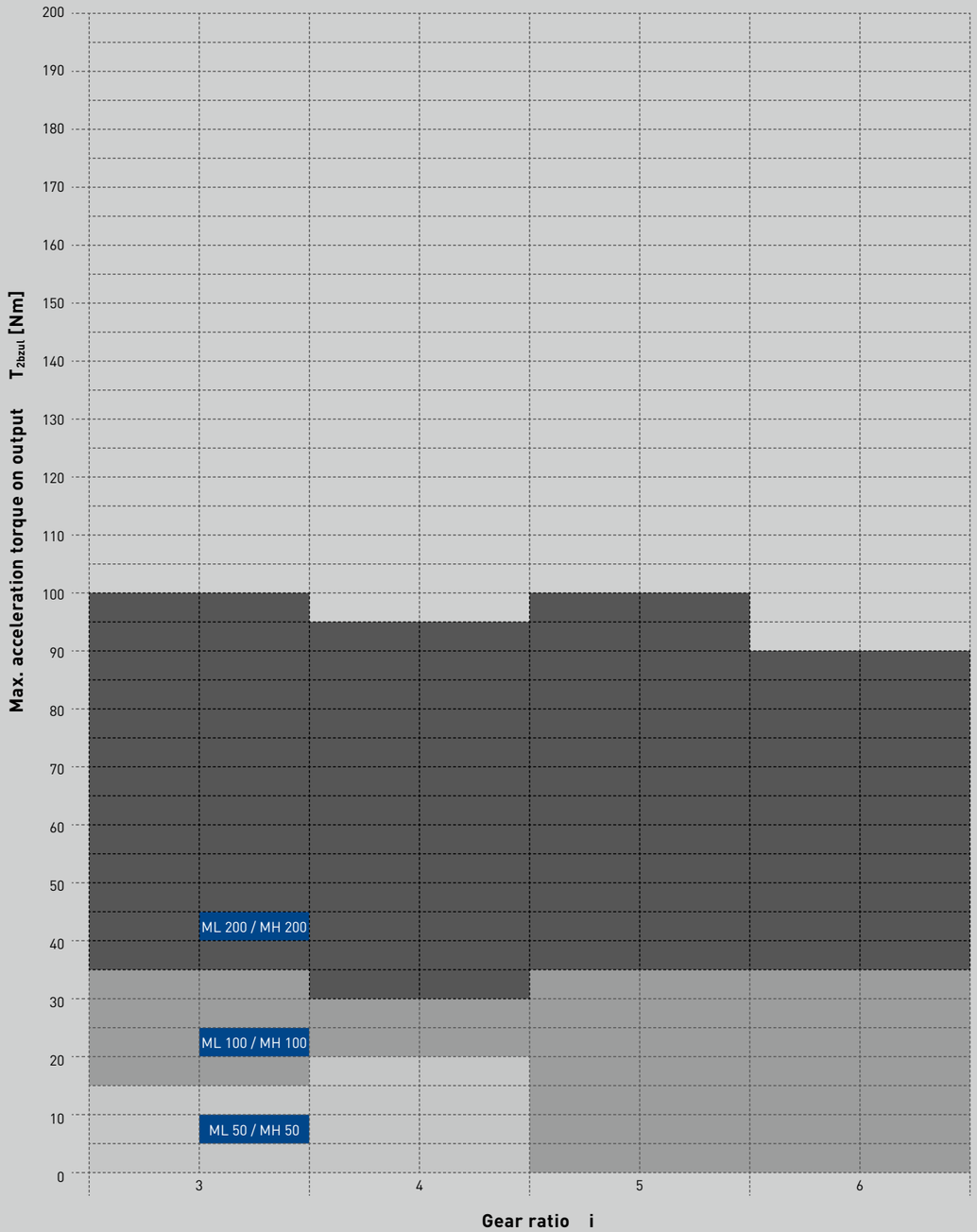

ML
TECHNICAL DATA

Technical specifications on this page and in the tables on the following two pages are intended only for rough preselection.

Gear teeth: ML 50 Klingenberg spiral bevel toothing
ML 100 – ML 200 Klingelnberg spiral bevel toothing ground

Direction of rotation: The opposite direction when facing C and A

Efficiency:
Size 50 η ~0,88 – 0,92
Size 100 η ~0,90 – 0,94
Size 200 η ~0,90 – 0,94

Life time: 20000 h

Permissible gearbox temperature at housing: -10 °C to +90 °C

Lubrication: Oil lubrication

Mounting position: Any, please specify when ordering

Surface protection: Primer coat RAL 7035 Light grey

Protection rating: IP 54

ML BA 30, 50				50	
Ratio		i		3	4
Max. acceleration torque (max. 1000 cycles per hour)		T_{2bzul}	Nm	16	18
Nominal torque on output (with n_{1Nzul})		T_{2Nzul}	Nm	12	12
Emergency stop torque (permissible 1000 times during gearbox life time)		$T_{2Notzul}$	Nm	30	30
Permissible average input speed (with T_{2Nzul} and 20 °C ambient temperature)		n_{1mzul}	min^{-1}	3000	3000
Max. input speed		$n_{1maxzul}$	min^{-1}	5000	5000
Max. backlash*		j	arcmin	≤ 7	
Torsional rigidity▲		C	Nm/arcmin	on request	
Max. radial load** (with reference to shaft centre on output shaft)		F_{2rzul}	N	900	900
Max. axial load** (with reference to shaft centre on output shaft)		F_{2azul}	N	650	650
Weight		m	kg	approx. 1,7	
Running noise (with n_1 = 3000 min^{-1} without load)		L_{PA}	dB(A)	approx. 75 / distance of 1 m	
Inertia (with reference to input)	Ø d 9	J_1	$kgcm^2$	0,177	0,151
	Ø d 11	J_1	$kgcm^2$	0,228	0,202
	Ø d 14	J_1	$kgcm^2$	0,279	0,253

▲ with reference to output
* measured with 2 % nominal torque on output shaft
perm. torques at n_1 = 1500 min^{-1} ** charge centre of output shaft at output speed 250 min^{-1}. Please contact us for combined load applications

ML 50 – ML 200
TECHNICAL DATA

The following technical specifications in the table are intended only for rough preselection

ML BA 30, 50				100			
Ratio		i		3	4	5	6
Max. acceleration torque (max. 1000 cycles per hour)		T_{2bzul}	Nm	35	30	35	35
Nominal torque on output (with n_{1Nzul})		T_{2Nzul}	Nm	30	25	30	30
Emergency stop torque (permissible 1000 times during gearbox life time)		$T_{2Notzul}$	Nm	75	62	75	75
Permissible average input speed (with T_{2Nzul} and 20 °C ambient temperature)		n_{1mzul}	min^{-1}	3000	3000	3000	3000
Max. input speed		$n_{1maxzul}$	min^{-1}	5000	5000	5000	5000
Max. backlash*		j	arcmin	≤ 4			
Torsional rigidity▲		C	Nm/arcmin	on request			
Max. radial load** (with reference to shaft centre on output shaft)		F_{2rzul}	N	1450	1450	1450	1450
Max. axial load** (with reference to shaft centre on output shaft)		F_{2azul}	N	1000	1000	1000	1000
Weight		m	kg	approx. 5			
Running noise (with n_1 = 3000 min^{-1} without load)		L_{PA}	dB(A)	approx. 75 / distance of 1 m			
Inertia (with reference to input)	Ø d 9	J_1	$kgcm^2$	0,80	0,73	0,73	0,69
	Ø d 11	J_1	$kgcm^2$	0,87	0,80	0,79	0,75
	Ø d 14	J_1	$kgcm^2$	1,18	0,92	0,92	0,88
	Ø d 19	J_1	$kgcm^2$	1,47	1,43	1,40	1,36

ML BA 30, 50				200			
Ratio		i		3	4	5	6
Max. acceleration torque (max. 1000 cycles per hour)		T_{2bzul}	Nm	100	95	100	90
Nominal torque on output (with n_{1Nzul})		T_{2Nzul}	Nm	75	75	75	70
Emergency stop torque (permissible 1000 times during gearbox life time)		$T_{2Notzul}$	Nm	187	187	187	175
Permissible average input speed (with T_{2Nzul} and 20 °C ambient temperature)		n_{1mzul}	min^{-1}	3000	3000	3000	3000
Max. input speed		$n_{1maxzul}$	min^{-1}	5000	5000	5000	5000
Max. backlash*		j	arcmin	≤ 4			
Torsional rigidity▲		C	Nm/arcmin	on request			
Max. radial load** (with reference to shaft centre on output shaft)		F_{2rzul}	N	2200	2200	2200	2200
Max. axial load** (with reference to shaft centre on output shaft)		F_{2azul}	N	1550	1550	1550	1550
Weight		m	kg	approx. 12,5			
Running noise (with n_1 = 3000 min^{-1} without load)		L_{PA}	dB(A)	approx. 75 / distance of 1 m			
Inertia (with reference to input)	Ø d 14	J_1	$kgcm^2$	4,91	4,57	4,41	4,31
	Ø d 19	J_1	$kgcm^2$	5,40	5,05	5,00	4,90
	Ø d 24	J_1	$kgcm^2$	6,36	6,02	5,96	5,76
	Ø d 28	J_1	$kgcm^2$	8,59	8,24	8,18	8,00

▲ with reference to output
* measured with 2 % nominal torque on output shaft
perm. torques at n_1 = 1500 min^{-1} ** charge centre of output shaft at output speed 250 min^{-1}. Please contact us for combined load applications

ML 50

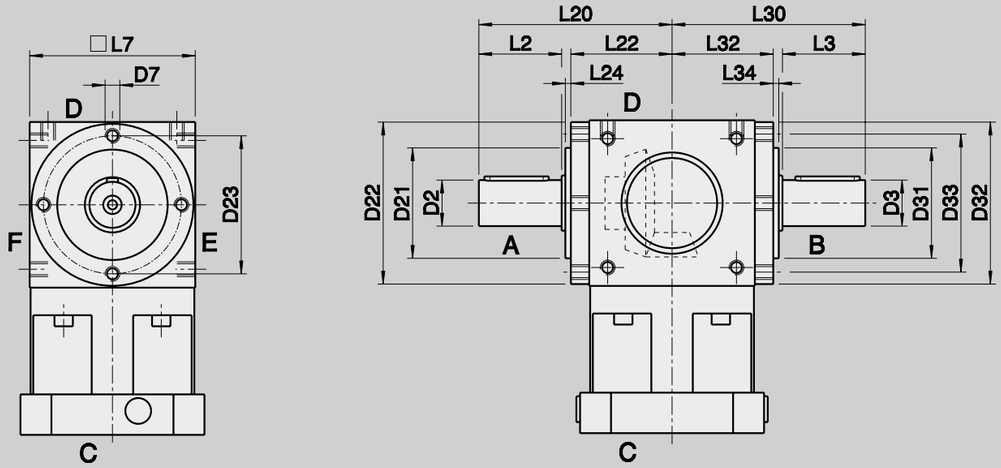

ML 100 / 200

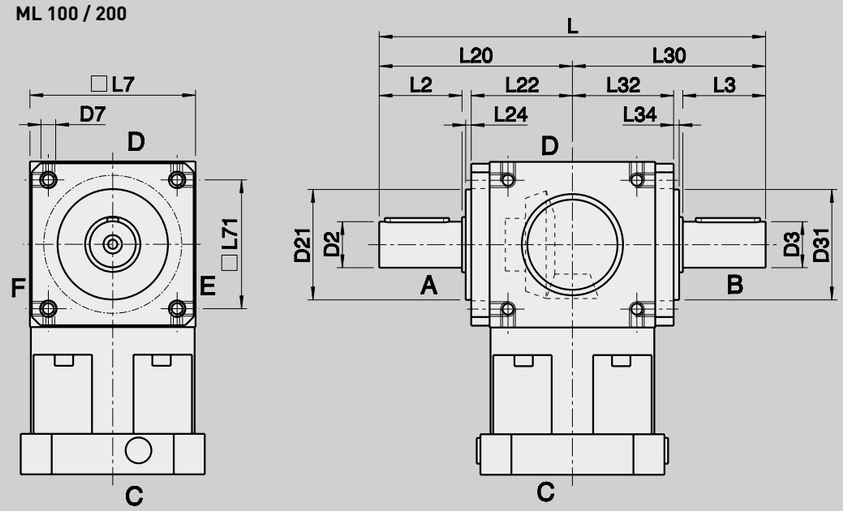

BA 30

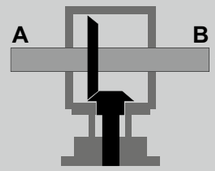

BA 50

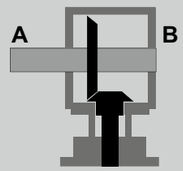

d	x	l1	Size	D2	D3	D7	D21	D22	D23	D31	D32	D33	Key D2 / D3 according to DIN 6885/1
G7				j6	j6		f7			f7			
9	x	20	**50**	12	12	M6	44	64,5	54	44	64,5	54	4x4x20
11	x	23											
14	x	30											
9	x	20	**100**	18	18	M8	60			60			6x6x25
11	x	23											
14	x	30											
19	x	40											
11	x	23	**200**	25	25	M10	80			80			8x7x36
14	x	30											
19	x	40											
24	x	50											
28	x	60											

d	x	l1	Size	L	L2	L3	L7	L20	L22	L24	L30	L32	L34	L71
G7														
9	x	20	**50**	144	26	26	65	72	42	2	72	42	2	45
11	x	23												
14	x	30												
9	x	20	**100**	190	35	35	90	95	55	3	95	55	3	70
11	x	23												
14	x	30												
19	x	40												
11	x	23	**200**	244	45	45	120	122	72	3	122	72	3	100
14	x	30												
19	x	40												
24	x	50												
28	x	60												

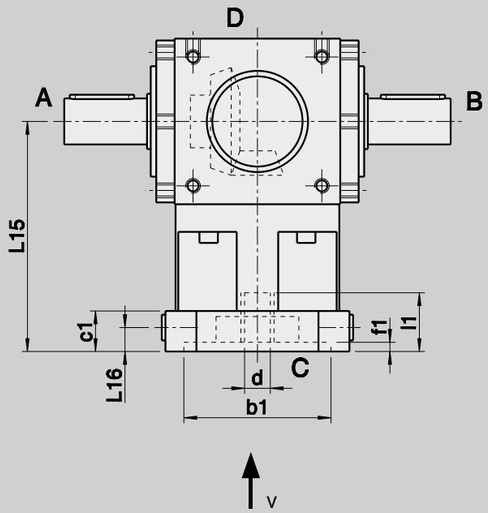

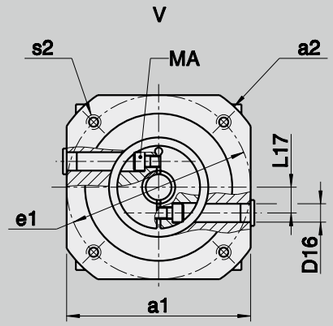

Motor dimensions										
a1		75	90	95	95	115	125	125	130	140
a2		100	120	105	120	140	140	140	160	190
b1	G8	70	80	70	80	95	80	95	110	130
e1		85	100	85	100	115	100	115	130	165
s2		M6 x12 Ø 7,0	M6 x12 Ø 7,0	M6 x12 Ø 7,0	M6 x12 Ø 7,0	M8 x16 Ø 9,0	M6 x12 Ø 7,0	M8 x16 Ø 9,0	M8 x16 Ø 9,0	M10 x20 Ø 11,0

Gearbox dimensions																				
d	**x**	**l1**	**Size**	**L15**	**L16**	**L17**	**c1**	**f1**	**D16**	**Screw type**	**MA**									
G7											[Nm]									
9	x	20		90	9,5	10	16	4,5	8,5	M6 / 12.9	18	x								
11	x	23	**50**	90	9,5	10	16	4,5	8,5	M6 / 12.9	18		x							
14	x	30		90	9,5	10	16	4,5	8,5	M6 / 12.9	18					x				
9	x	20		125	13	12,5	22	5	10	M6 / 12.9	18			x						
11	x	23	**100**	125	13	12,5	22	5	10	M6 / 12.9	18				x					
14	x	30		125	13	12,5	22	5	10	M6 / 12.9	18					x				
19	x	40		125	13	12,5	22	5	10	M6 / 12.9	18								x	
11	x	23		145	15	16,5	25	5	14	M6 / 12.9	18						x			
14	x	30		145	15	16,5	25	5	14	M6 / 12.9	18							x		
19	x	40	**200**	145	15	16,5	25	5	14	M8 / 12.9	39								x	
24	x	50		145	15	16,5	25	5	14	M8 / 12.9	43								x	
28	x	60		145	15	16,5	25	5	14	M8 / 12.9	43									x

MH
TECHNICAL DATA

Technical specifications on this page and in the tables on the following two pages are intended only for rough preselection.

Gear teeth: MH 50 Klingenberg spiral bevel toothing
MH 100 – MH 200 Klingelnberg spiral bevel toothing ground

Direction of rotation: The opposite direction when facing C and A

Efficiency:
Size 50 η ~0,88 – 0,92
Size 100 η ~0,90 – 0,94
Size 200 η ~0,90 – 0,94

Life time: 20000 h

Permissible gearbox temperature at housing: -10 °C to +90 °C

Lubrication: Oil lubrication

Mounting position: Any, please specify when ordering

Surface protection: Primer coat RAL 7035 Light grey

Protection rating: IP 54

MH BA 70				50	
Ratio		i		3	4
Max. acceleration torque (max. 1000 cycles per hour)		T_{2bzul}	Nm	16	18
Nominal torque on output (with n_{1Nzul})		T_{2Nzul}	Nm	12	12
Emergency stop torque (permissible 1000 times during gearbox life time)		$T_{2Notzul}$	Nm	30	30
Permissible average input speed (with T_{2Nzul} and 20 °C ambient temperature)		n_{1mzul}	min^{-1}	3000	3000
Max. input speed		$n_{1maxzul}$	min^{-1}	5000	5000
Max. backlash*		j	arcmin	≤ 7	
Torsional rigidity▲		C	Nm/arcmin	on request	
Max. radial load** (with reference to shaft centre on output shaft)		F_{2rzul}	N	1300	1300
Max. axial load** (with reference to shaft centre on output shaft)		F_{2azul}	N	900	900
Weight		m	kg	approx. 1,7	
Running noise (with n_1 = 3000 min^{-1} without load)		L_{PA}	dB(A)	approx. 75 / distance of 1 m	
Inertia (with reference to input)	Ø d 9	J_1	$kgcm^2$	0,186	0,159
	Ø d 11	J_1	$kgcm^2$	0,239	0,212
	Ø d 14	J_1	$kgcm^2$	0,293	0,266

▲ with reference to output
* measured with 2 % nominal torque on output shaft
perm. torques at n_1 = 1500 min^{-1} ** charge centre of output shaft at output speed 250 min^{-1}. Please contact us for combined load applications

MH 50 – MH 200
TECHNICAL DATA

The following technical specifications in the table are intended only for rough preselection

MH BA 70				100			
Ratio		i		3	4	5	6
Max. acceleration torque (max. 1000 cycles per hour)		T_{2bzul}	Nm	35	30	35	35
Nominal torque on output (with n_{1Nzul})		T_{2Nzul}	Nm	30	25	30	30
Emergency stop torque (permissible 1000 times during gearbox life time)		$T_{2Notzul}$	Nm	75	62	75	75
Permissible average input speed (with T_{2Nzul} and 20 °C ambient temperature)		n_{1mzul}	min^{-1}	3000	3000	3000	3000
Max. input speed		$n_{1maxzul}$	min^{-1}	5000	5000	5000	5000
Max. backlash*		j	arcmin	≤ 4			
Torsional rigidity▲		C	Nm/arcmin	on request			
Max. radial load** (with reference to shaft centre on output shaft)		F_{2rzul}	N	1900	1900	1900	1900
Max. axial load** (with reference to shaft centre on output shaft)		F_{2azul}	N	1500	1500	1500	1500
Weight		m	kg	approx. 5			
Running noise (with n_1 = 3000 min^{-1} without load)		L_{PA}	dB(A)	approx. 75 / distance of 1 m			
Inertia (with reference to input)	Ø d 9	J_1	$kgcm^2$	0,88	0,78	0,76	0,71
	Ø d 11	J_1	$kgcm^2$	0,94	0,84	0,82	0,77
	Ø d 14	J_1	$kgcm^2$	1,07	0,96	0,95	0,90
	Ø d 19	J_1	$kgcm^2$	1,55	1,45	1,43	1,38

MH BA 70				200			
Ratio		i		3	4	5	6
Max. acceleration torque (max. 1000 cycles per hour)		T_{2bzul}	Nm	100	95	100	90
Nominal torque on output (with n_{1Nzul})		T_{2Nzul}	Nm	75	75	75	70
Emergency stop torque (permissible 1000 times during gearbox life time)		$T_{2Notzul}$	Nm	187	187	187	175
Permissible average input speed (with T_{2Nzul} and 20 °C ambient temperature)		n_{1mzul}	min^{-1}	3000	3000	3000	3000
Max. input speed		$n_{1maxzul}$	min^{-1}	5000	5000	5000	5000
Max. backlash*		j	arcmin	≤ 4			
Torsional rigidity▲		C	Nm/arcmin	on request			
Max. radial load** (with reference to shaft centre on output shaft)		F_{2rzul}	N	3000	3000	3000	3000
Max. axial load** (with reference to shaft centre on output shaft)		F_{2azul}	N	2200	2200	2200	2200
Weight		m	kg	approx. 12,5			
Running noise (with n_1 = 3000 min^{-1} without load)		L_{PA}	dB(A)	approx. 75 / distance of 1 m			
Inertia (with reference to input)	Ø d 14	J_1	$kgcm^2$	5,38	4,83	4,77	4,52
	Ø d 19	J_1	$kgcm^2$	6,17	5,31	5,25	5,01
	Ø d 24	J_1	$kgcm^2$	7,33	6,30	6,23	5,98
	Ø d 28	J_1	$kgcm^2$	9,10	8,57	8,45	8,20

▲ with reference to output
* measured with 2 % nominal torque on output shaft
perm. torques at n_1 = 1500 min^{-1} ** charge centre of output shaft at output speed 250 min^{-1}. Please contact us for combined load applications

MH 50

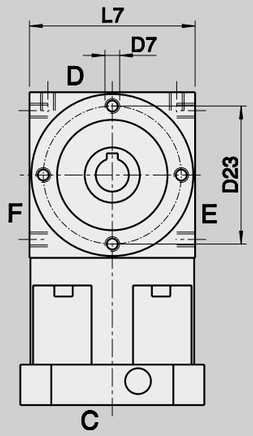

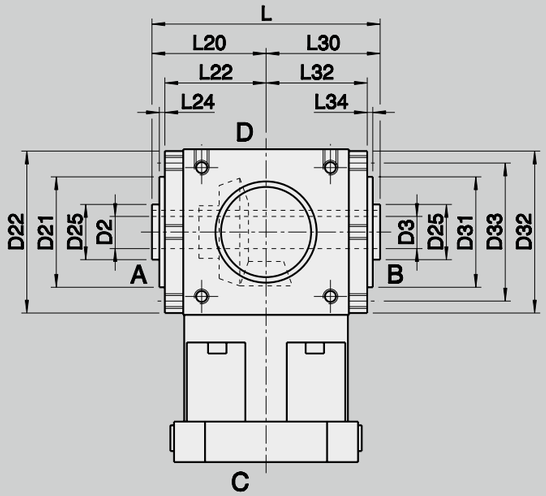

MH 100 / 200

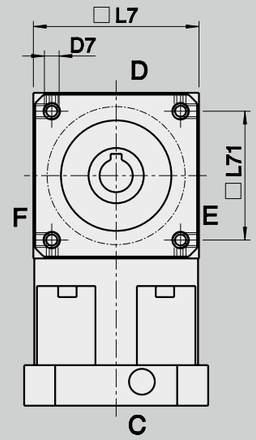

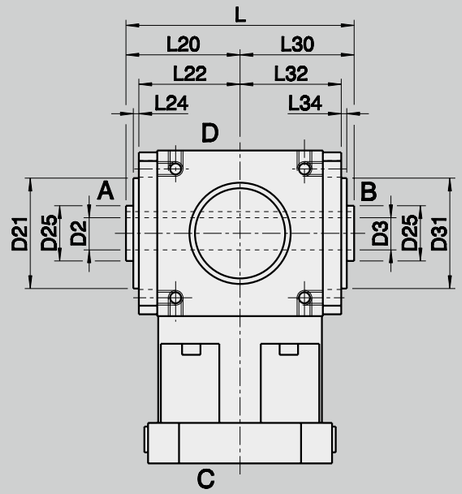

BA 70

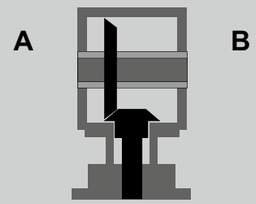

d	x	l1	Size	D2	D3	D7	D21	D22	D23	D25	D31	D32	D33	Keyway according to DIN 6885/1
G7				H7	H7		f7				f7			JS9
9	x	20												
11	x	23	**50**	12	12	M6	44	64,5	54	20	44	64,5	54	4
14	x	30												
9	x	20												
11	x	23	**100**	18	18	M8	60			30	60			6
14	x	30												
19	x	40												
11	x	23												
14	x	30												
19	x	40	**200**	25	25	M10	80			40	80			8
24	x	50												
28	x	60												

d	x	l1	Size	L	L7	L20	L22	L24	L30	L32	L34	L71
G7												
9	x	20										
11	x	23	**50**	92	65	46	42	2	46	42	2	45
14	x	30										
9	x	20										
11	x	23	**100**	124	90	62	55	3	62	55	3	70
14	x	30										
19	x	40										
11	x	23										
14	x	30										
19	x	40	**200**	170	120	85	77	5	85	77	5	100
24	x	50										
28	x	60										

MH 50 – MH 200 SHRINK DISC

DIMENSIONS

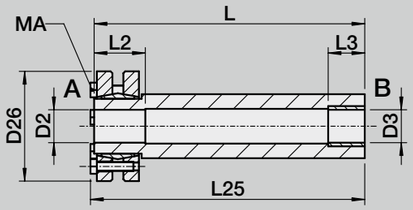

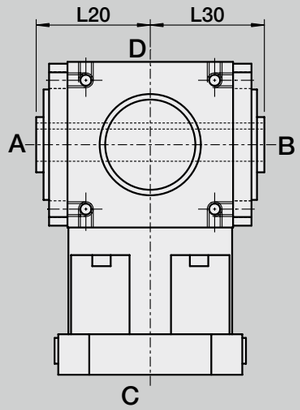

Order details: Side A (or B) with shrink disc
The required clamping torques MA can be found on the shrink disc.

Size	D2	D3	D26	L	L2	L3	L20	L25	L30	MA
	H7	H7								See separate note!
50	12	12	41	110	22	12	46	115	46	
100	18	18	50	147	21	21	62	148	62	
200	25	25	60	198	24	21	85	199	85	

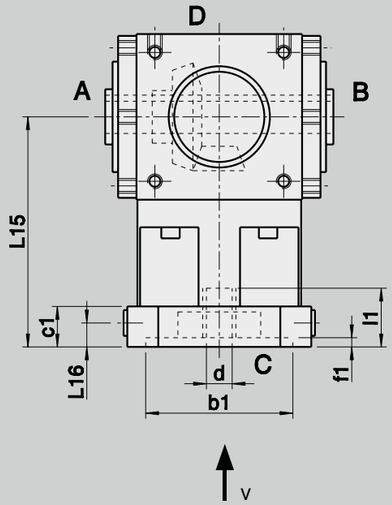

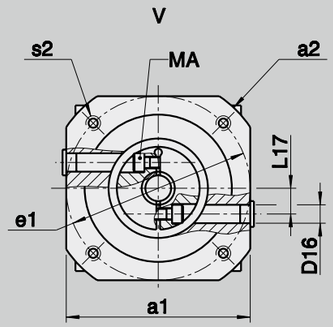

Gearbox dimensions											
d	**x**	**l1**	**Size**	**L15**	**L16**	**L17**	**c1**	**f1**	**D16**	**Screw type**	**MA**
G7											[Nm]
9	x	20		90	9,5	10	16	4,5	8,5	M6 / 12.9	18
11	x	23	**50**	90	9,5	10	16	4,5	8,5	M6 / 12.9	18
14	x	30		90	9,5	10	16	4,5	8,5	M6 / 12.9	18
9	x	20		125	13	12,5	22	5	10	M6 / 12.9	18
11	x	23	**100**	125	13	12,5	22	5	10	M6 / 12.9	18
14	x	30		125	13	12,5	22	5	10	M6 / 12.9	18
19	x	40		125	13	12,5	22	5	10	M6 / 12.9	18
11	x	23		145	15	16,5	25	5	14	M6 / 12.9	18
14	x	30		145	15	16,5	25	5	14	M6 / 12.9	18
19	x	40	**200**	145	15	16,5	25	5	14	M8 / 12.9	39
24	x	50		145	15	16,5	25	5	14	M8 / 12.9	43
28	x	60		145	15	16,5	25	5	14	M8 / 12.9	43

Motor dimensions										
a1		75	90	95	95	115	125	125	130	140
a2		100	120	105	120	140	140	140	160	190
b1	G8	70	80	70	80	95	80	95	110	130
e1		85	100	85	100	115	100	115	130	165
s2		M6 x12 Ø 7,0	M6 x12 Ø 7,0	M6 x12 Ø 7,0	M6 x12 Ø 9,0	M8 x16 Ø 9,0	M6 x12 Ø 7,0	M8 x16 Ø 9,0	M8 x16 Ø 9,0	M10 x20 Ø 11,0
		x								
			x							
						x				
				x						
					x					
						x				
									x	
							x			
								x		
									x	
									x	
										x

BEVEL HELICAL GEARBOXES

The gearboxes have a 2-stage design, input is via a spiral bevel stage, output via a helical stage. The housing and bearing flanges are made of high-grade grey cast iron, have been machined all-round and have fastening threads 1,5 x Ø.

Centring possibilities have been included on all input and output flanges. The use of sturdy roller bearings ensures a long service life. The modular system allows a wide range of input and output modifications.

MKS		
1	2	4
Page 120	Page 121	Page 121

MKSH		
1	2	4
Page 126	Page 127	Page 127

MKSHF Output flange		
1	2	4
Page 132	Page 132	Page 132

MKSH Shrink disc		
1	2	4
Page 133	Page 133	Page 133

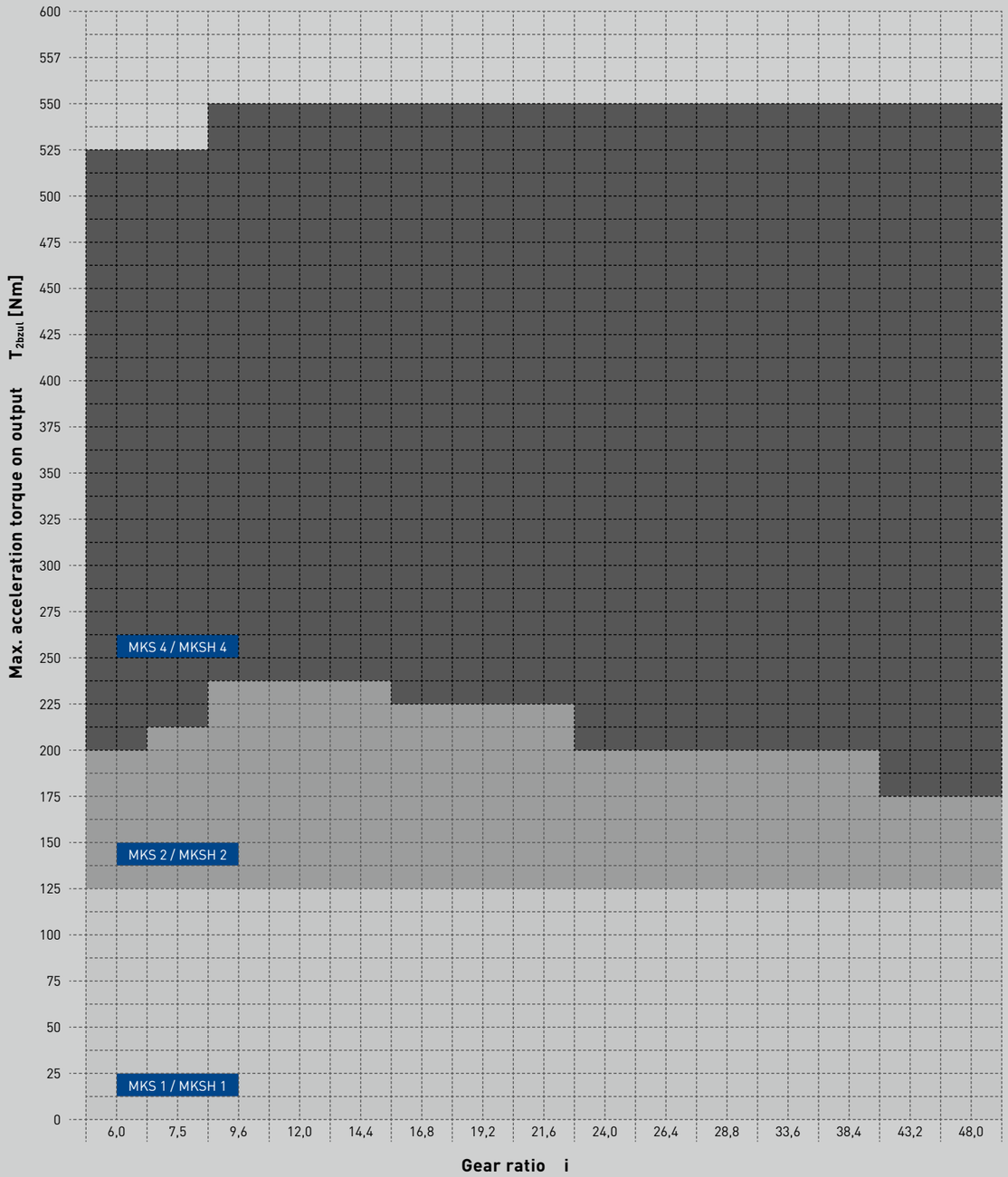

MKS
TECHNICAL DATA

Technical specifications on this page and in the tables on the following two pages are intended only for rough preselection.

Gear teeth: MKS 1 – MKS 4
Klingelnberg spiral bevel toothing ground

Direction of rotation: The opposite direction when facing C and A

Efficiency: Size 1 η =0,90 – 0,92
Size 2 η =0,90 – 0,93
Size 4 η =0,92 – 0,94

Life time: 20000 h

Permissible gearbox temperature at housing: -10 °C to +90 °C

Lubrication: Oil lubrication

Mounting position: Any, please specify when ordering

Surface protection: Primer coat RAL 9005 Black

Protection rating: IP 54

MKS				1														
				without offset											with offset			
Ratio		i		6	7,5	9,6	12	14,4	16,8	19,2	21,6	24	26,4	28,8	33,6	38,4	43,2	48
Max. acceleration torque (max. 1000 cycles per hour)		T_{2bzul}	Nm	120	120	130	130	130	120	120	120	130	130	130	130	120	120	120
Nominal torque on output (with n_{1Nzul})		T_{2Nzul}	Nm	100	100	110	110	110	100	100	100	110	110	110	110	100	100	100
Emergency stop torque (permissible 1000 times during gearbox life time)		$T_{2Notzul}$	Nm	250	250	275	275	275	250	250	250	275	275	275	275	250	250	250
Permissible average input speed (with T_{2Nzul} and 20 °C ambient temperature)		n_{1mzul}	min^{-1}	3000											3000			
Max. input speed		$n_{1maxzul}$	min^{-1}	5000											5000			
Max. backlash*		j	arcmin	≤ 4														
Torsional rigidity▲		C	Nm/arcmin	on request														
Max. radial load** (with reference to shaft centre on output shaft)		F_{2rzul}	N	4800														
Max. axial load*** (with reference to shaft centre on output shaft)		F_{2azul}	N	2400														
Weight		m	kg	approx. 9														
Running noise (with n_1 = 3000 min^{-1} without load)		L_{PA}	dB(A)	approx. 75 / distance of 1 m														
Inertia (with reference to input)	Ø d 9	J_1	$kgcm^2$	1,16	1,19	1,20	0,94	0,79	0,82	0,81	0,74	0,78	0,75	0,75	0,71	0,71	0,70	0,69
	Ø d 11	J_1	$kgcm^2$	1,21	1,25	1,26	1,00	0,84	0,87	0,91	0,80	0,84	0,82	0,80	0,77	0,76	0,76	0,75
	Ø d 14	J_1	$kgcm^2$	1,34	1,38	1,39	1,12	0,96	0,99	1,03	0,93	0,96	0,94	0,94	0,90	0,89	0,89	0,87
	Ø d 19	J_1	$kgcm^2$	1,70	1,74	1,75	1,49	1,31	1,36	1,49	1,33	1,40	1,39	1,36	1,27	1,26	1,24	1,24

▲ with reference to output
* measured with 2 % nominal torque on output shaft
** charge centre of output shaft at output speed 250 min^{-1}. Please contact us for combined load applications
*** please consult the manufacturer for details of version with shrink disc

perm. torques at n_1 = 1500 min^{-1}

MKS 1 – MKS 4
TECHNICAL DATA

The following technical specifications in the table are intended only for rough preselection

MKS				2														
				without offset											with offset			
Ratio		i		6	7,5	9,6	12	14,4	16,8	19,2	21,6	24	26,4	28,8	33,6	38,4	43,2	48
Max. acceleration torque (max. 1000 cycles per hour)		T_{2bzul}	Nm	200	210	240	240	240	230	220	220	200	200	200	200	200	180	180
Nominal torque on output (with n_{1Nzul})		T_{2Nzul}	Nm	160	170	200	200	200	190	180	180	160	160	150	150	150	150	150
Emergency stop torque (permissible 1000 times during gearbox life time)		$T_{2Notzul}$	Nm	400	425	500	500	500	475	450	450	400	400	375	375	375	375	375
Permissible average input speed (with T_{2Nzul} and 20 °C ambient temperature)		n_{1mzul}	min^{-1}	3000											3000			
Max. input speed		$n_{1maxzul}$	min^{-1}	5000											5000			
Max. backlash*		j	arcmin	≤ 4														
Torsional rigidity▲		C	Nm/arcmin	on request														
Max. radial load** (with reference to shaft centre on output shaft)		F_{2rzul}	N	6500														
Max. axial load*** (with reference to shaft centre on output shaft)		F_{2azul}	N	3250														
Weight		m	kg	approx. 13,5														
Running noise (with n_1 = 3000 min^{-1} without load)		L_{PA}	dB(A)	approx. 75 / distance of 1 m														
Inertia (with reference to input)	Ø d 9	J_1	$kgcm^2$	2,09	1,57	1,71	1,01	1,15	1,00	0,91	0,88	0,85	0,84	0,76	0,75	0,74	0,73	0,71
	Ø d 11	J_1	$kgcm^2$	2,15	1,63	1,77	1,07	1,21	1,06	0,97	0,94	0,91	0,90	0,88	0,81	0,80	0,79	0,77
	Ø d 14	J_1	$kgcm^2$	2,27	1,76	1,90	1,19	1,34	1,19	1,09	1,06	1,03	1,03	1,00	0,93	0,92	0,92	0,89
	Ø d 19	J_1	$kgcm^2$	2,64	2,12	2,26	1,55	1,70	1,55	1,63	1,43	1,40	1,40	1,37	1,30	1,29	1,28	1,26

MKS				4														
				without offset											with offset			
Ratio		i		6	7,5	9,6	12	14,4	16,8	19,2	21,6	24	26,4	28,8	33,6	38,4	43,2	48
Max. acceleration torque (max. 1000 cycles per hour)		T_{2bzul}	Nm	420	420	460	450	450	450	450	440	440	450	450	450	440	440	440
Nominal torque on output (with n_{1Nzul})		T_{2Nzul}	Nm	360	360	400	400	400	400	400	380	380	400	400	400	400	400	400
Emergency stop torque (permissible 1000 times during gearbox life time)		$T_{2Notzul}$	Nm	900	900	1000	1000	1000	1000	1000	950	950	1000	1000	1000	1000	1000	1000
Permissible average input speed (with T_{2Nzul} and 20 °C ambient temperature)		n_{1mzul}	min^{-1}	3000											3000			
Max. input speed		$n_{1maxzul}$	min^{-1}	5000											5000			
Max. backlash*		j	arcmin	≤ 4														
Torsional rigidity▲		C	Nm/arcmin	on request														
Max. radial load** (with reference to shaft centre on output shaft)		F_{2rzul}	N	10000														
Max. axial load*** (with reference to shaft centre on output shaft)		F_{2azul}	N	5000														
Weight		m	kg	approx. 23,5														
Running noise (with n_1 = 3000 min^{-1} without load)		L_{PA}	dB(A)	approx. 75 / distance of 1 m														
Inertia (with reference to input)	Ø d 9	J_1	$kgcm^2$	7,62	8,10	6,48	5,30	4,62	3,98	3,75	3,22	3,33	3,00	3,02	2,79	2,68	2,60	2,57
	Ø d 11	J_1	$kgcm^2$	7,65	8,20	6,51	5,37	4,69	4,05	3,81	3,28	3,39	3,06	3,09	2,86	2,74	2,54	2,53
	Ø d 14	J_1	$kgcm^2$	7,80	8,32	6,66	5,49	4,81	4,17	3,94	3,40	3,52	3,19	3,21	2,98	2,87	2,79	2,76
	Ø d 19	J_1	$kgcm^2$	8,28	8,69	7,15	5,85	5,17	4,54	4,30	3,77	3,88	3,55	3,58	3,35	3,23	3,16	3,12
	Ø d 24	J_1	$kgcm^2$	9,37	9,64	8,20	6,91	6,23	5,59	5,36	4,82	4,76	4,61	4,63	4,40	4,35	4,21	4,17
	Ø d 28	J_1	$kgcm^2$	11,60	11,84	10,47	9,10	8,42	7,79	7,55	7,02	7,13	6,80	6,83	6,60	6,48	6,41	6,37
	Ø d 32	J_1	$kgcm^2$	12,21	12,43	11,00	9,75	8,96	8,24	7,96	7,63	7,64	7,40	7,38	7,18	6,99	9,95	6,88

▲ with reference to output
* measured with 2 % nominal torque on output shaft
** charge centre of output shaft at output speed 250 min^{-1}. Please contact us for combined load applications
*** please consult the manufacturer for details of version with shrink disc

perm. torques at n_1 = 1500 min^{-1}

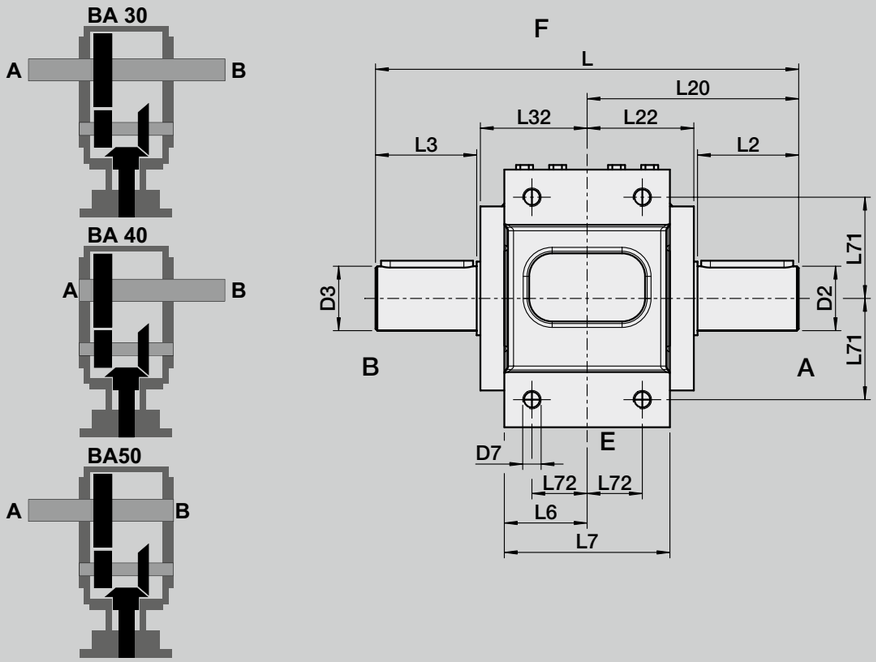

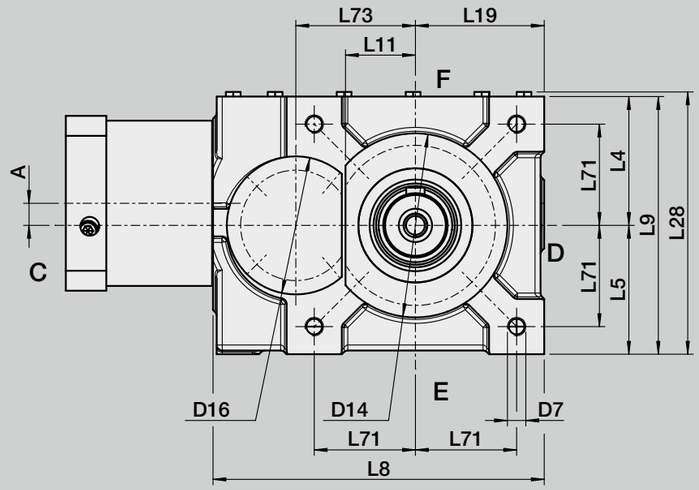

d	x	l1	Size	D2	D3	D7	D14	D16	Key D2/D3 according to DIN 6885/1	L	L2	L3	L4	L5	L6	L7
G7				j6	j6		f7									
9	x	20														
11	x	23	1	30	30	M8	88	72	8x7x40	200	47	47	58	55	37,5	75
14	x	35														
19	x	40														
9	x	20														
11	x	23	2	35	35	M10	100	75	10x8x50	230	55	55	70	70	45	90
14	x	35														
19	x	40														
11	x	23														
14	x	30														
19	x	40	4	45	45	M12	127	90	14x9x60	280	70	70	85	85	55	110
24	x	50														
28	x	60														
32	x	60														

d	x	l1	Size	L8	L9	L11	L19	L20	L22	L28	L32	L71	L72	L73	A*
G7															
9	x	20													
11	x	23	1	155	113	33	55	100	51	116,5	51	44	28	55	12 / 0
14	x	35													
19	x	40													
9	x	20													
11	x	23	2	180	140	39	70	115	58	145	58	55	30	65	12 / 0
14	x	35													
19	x	40													
11	x	23													
14	x	30													
19	x	40	4	227	170	50	85	140	68	175	68	67	37	82	18 / 0
24	x	50													
28	x	60													
32	x	60													

* from ratio 33,6 otherwise 0

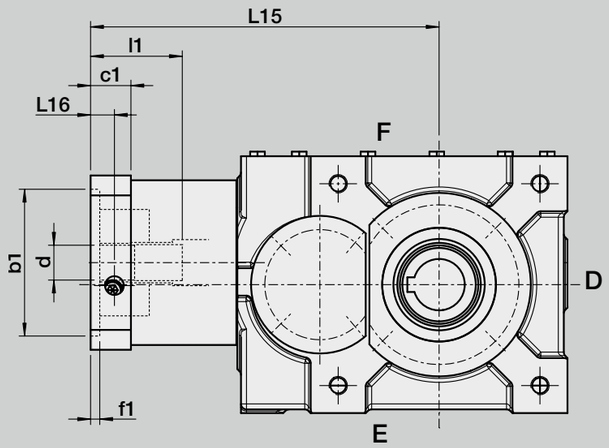

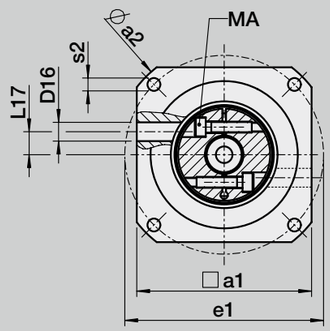

Gearbox dimensions											
d	**x**	**l1**	**Size**	**L15**	**L16**	**L17**	**c1**	**f1**	**D16**	**Screw type**	**MA**
G7											[Nm]
9	x	20	1	180	13	12,5	22	5	10	M6 / 12.9	18
11	x	23		180	13	12,5	22	5	10	M6 / 12.9	18
14	x	30		180	13	12,5	22	5	10	M6 / 12.9	18
19	x	40		180	13	12,5	22	5	10	M6 / 12.9	18
9	x	20	2	190	13	12,5	22	5	10	M6 / 12.9	18
11	x	23		190	13	12,5	22	5	10	M6 / 12.9	18
14	x	30		190	13	12,5	22	5	10	M6 / 12.9	18
19	x	40		190	13	12,5	22	5	10	M6 / 12.9	18
11	x	23	4	227	15	16,5	25	5	14	M6 / 12.9	18
14	x	30		227	15	16,5	25	5	14	M6 / 12.9	18
19	x	40		227	15	16,5	25	5	14	M8 / 12.9	39
24	x	50		227	15	16,5	25	5	14	M8 / 12.9	43
28	x	60		227	15	16,5	25	5	14	M8 / 12.9	43
32	x	60		227	15	16,5	25	5	14	M8 / 12.9	43

Motor dimensions								
a1		95	95	115	125	125	130	140
a2		105	120	140	140	140	160	190
b1	G8	70	80	95	80	95	110	130
e1		85	100	115	100	115	130	165
s2		M6 x12 Ø 7,0	M6 x12 Ø 7,0	M8 x16 Ø 9,0	M6 x12 Ø 7,0	M8 x16 Ø 9,0	M8 x16 Ø 9,0	M10 x20 Ø 11,0
		x	x	x			x	
		x	x	x			x	
		x	x	x			x	
		x	x	x			x	
		x	x	x			x	
		x	x	x			x	
		x	x	x			x	
		x	x	x			x	
					x	x	x	x
					x	x	x	x
					x	x	x	x
					x	x	x	x
					x	x	x	x
					x	x	x	x

MKSH
TECHNICAL DATA

Technical specifications on this page and in the tables on the following two pages are intended only for rough preselection.

Gear teeth: MKSH 1 – MKSH 4
Klingelnberg spiral bevel toothing ground

Direction of rotation: The opposite direction when facing C and A

Efficiency: Size 1 η =0,90 – 0,92
Size 2 η =0,90 – 0,93
Size 4 η =0,92 – 0,94

Life time: 20000 h

Permissible gearbox temperature at housing: -10 °C to +90 °C

Lubrication: Oil lubrication

Mounting position: Any, please specify when ordering

Surface protection: Primer coat RAL 9005 Black

Protection rating: IP 54

MKSH				1														
				without offset											with offset			
Ratio		i		6	7,5	9,6	12	14,4	16,8	19,2	21,6	24	26,4	28,8	33,6	38,4	43,2	48
Max. acceleration torque (max. 1000 cycles per hour)		T_{2bzul}	Nm	120	120	130	130	130	120	120	120	130	130	130	130	120	120	120
Nominal torque on output (with n_{1Nzul})		T_{2Nzul}	Nm	100	100	110	110	110	100	100	100	110	110	110	110	100	100	100
Emergency stop torque (permissible 1000 times during gearbox life time)		$T_{2Notzul}$	Nm	250	250	275	275	275	250	250	250	275	275	275	275	250	250	250
Permissible average input speed (with T_{2Nzul} and 20 °C ambient temperature)		n_{1mzul}	min^{-1}	3000											3000			
Max. input speed		$n_{1maxzul}$	min^{-1}	5000											5000			
Max. backlash*		j	arcmin	≤ 4														
Torsional rigidity▲		C	Nm/arcmin	on request														
Max. radial load** (with reference to shaft centre on output shaft)		F_{2rzul}	N	4800														
Max. axial load*** (with reference to shaft centre on output shaft)		F_{2azul}	N	2400														
Weight		m	kg	approx. 9														
Running noise (with n_1 = 3000 min^{-1} without load)		L_{PA}	dB(A)	approx. 75 / distance of 1 m														
Inertia (with reference to input)	Ø d 9	J_1	$kgcm^2$	1,16	1,19	1,20	0,94	0,79	0,82	0,81	0,74	0,78	0,75	0,75	0,71	0,71	0,70	0,69
	Ø d 11	J_1	$kgcm^2$	1,21	1,25	1,26	1,00	0,84	0,87	0,91	0,80	0,84	0,82	0,80	0,77	0,76	0,76	0,75
	Ø d 14	J_1	$kgcm^2$	1,34	1,38	1,39	1,12	0,96	0,99	1,03	0,93	0,96	0,94	0,94	0,90	0,89	0,89	0,87
	Ø d 19	J_1	$kgcm^2$	1,70	1,74	1,75	1,49	1,31	1,36	1,49	1,33	1,40	1,39	1,36	1,27	1,26	1,24	1,24

▲ with reference to output
* measured with 2 % nominal torque on output shaft
** charge centre of output shaft at output speed 250 min^{-1}. Please contact us for combined load applications
*** please consult the manufacturer for details of version with shrink disc

perm. torques at n_1 = 1500 min^{-1}

MKSH 1 – MKSH 4
TECHNICAL DATA

The following technical specifications in the table are intended only for rough preselection

MKSH				2														
				without offset											with offset			
Ratio		i		6	7,5	9,6	12	14,4	16,8	19,2	21,6	24	26,4	28,8	33,6	38,4	43,2	48
Max. acceleration torque (max. 1000 cycles per hour)		T_{2bzul}	Nm	200	210	240	240	240	230	220	220	200	200	200	200	200	180	180
Nominal torque on output (with n_{1Nzul})		T_{2Nzul}	Nm	160	170	200	200	200	190	180	180	160	160	150	150	150	150	150
Emergency stop torque (permissible 1000 times during gearbox life time)		$T_{2Notzul}$	Nm	400	425	500	500	500	475	450	450	400	400	375	375	375	375	375
Permissible average input speed (with T_{2Nzul} and 20 °C ambient temperature)		n_{1mzul}	min^{-1}	3000											3000			
Max. input speed		$n_{1maxzul}$	min^{-1}	5000											5000			
Max. backlash*		j	arcmin	≤ 4														
Torsional rigidity▲		C	Nm/arcmin	on request														
Max. radial load** (with reference to shaft centre on output shaft)		F_{2rzul}	N	6500														
Max. axial load*** (with reference to shaft centre on output shaft)		F_{2azul}	N	3250														
Weight		m	kg	approx. 13,5														
Running noise (with n_1 = 3000 min^{-1} without load)		L_{PA}	dB(A)	approx. 75 / distance of 1 m														
Inertia (with reference to input)	Ø d 9	J_1	$kgcm^2$	2,09	1,57	1,71	1,01	1,15	1,00	0,91	0,88	0,85	0,84	0,76	0,75	0,74	0,73	0,71
	Ø d 11	J_1	$kgcm^2$	2,15	1,63	1,77	1,07	1,21	1,06	0,97	0,94	0,91	0,90	0,88	0,81	0,80	0,79	0,77
	Ø d 14	J_1	$kgcm^2$	2,27	1,76	1,90	1,19	1,34	1,19	1,09	1,06	1,03	1,03	1,00	0,93	0,92	0,92	0,89
	Ø d 19	J_1	$kgcm^2$	2,64	2,12	2,26	1,55	1,70	1,55	1,63	1,43	1,40	1,40	1,37	1,30	1,29	1,28	1,26

MKSH				4														
				without offset											with offset			
Ratio		i		6	7,5	9,6	12	14,4	16,8	19,2	21,6	24	26,4	28,8	33,6	38,4	43,2	48
Max. acceleration torque (max. 1000 cycles per hour)		T_{2bzul}	Nm	420	420	460	450	450	450	450	440	440	450	450	450	440	440	440
Nominal torque on output (with n_{1Nzul})		T_{2Nzul}	Nm	360	360	400	400	400	400	400	380	380	400	400	400	400	400	400
Emergency stop torque (permissible 1000 times during gearbox life time)		$T_{2Notzul}$	Nm	900	900	1000	1000	1000	1000	1000	950	950	1000	1000	1000	1000	1000	1000
Permissible average input speed (with T_{2Nzul} and 20 °C ambient temperature)		n_{1mzul}	min^{-1}	3000											3000			
Max. input speed		$n_{1maxzul}$	min^{-1}	5000											5000			
Max. backlash*		j	arcmin	≤ 4														
Torsional rigidity▲		C	Nm/arcmin	on request														
Max. radial load** (with reference to shaft centre on output shaft)		F_{2rzul}	N	10000														
Max. axial load*** (with reference to shaft centre on output shaft)		F_{2azul}	N	5000														
Weight		m	kg	approx. 23,5														
Running noise (with n_1 = 3000 min^{-1} without load)		L_{PA}	dB(A)	approx. 75 / distance of 1 m														
Inertia (with reference to input)	Ø d 9	J_1	$kgcm^2$	7,62	8,10	6,48	5,30	4,62	3,98	3,75	3,22	3,33	3,00	3,02	2,79	2,68	2,60	2,57
	Ø d 11	J_1	$kgcm^2$	7,65	8,20	6,51	5,37	4,69	4,05	3,81	3,28	3,39	3,06	3,09	2,86	2,74	2,54	2,53
	Ø d 14	J_1	$kgcm^2$	7,80	8,32	6,66	5,49	4,81	4,17	3,94	3,40	3,52	3,19	3,21	2,98	2,87	2,79	2,76
	Ø d 19	J_1	$kgcm^2$	8,28	8,69	7,15	5,85	5,17	4,54	4,30	3,77	3,88	3,55	3,58	3,35	3,23	3,16	3,12
	Ø d 24	J_1	$kgcm^2$	9,37	9,64	8,20	6,91	6,23	5,59	5,36	4,82	4,76	4,61	4,63	4,40	4,35	4,21	4,17
	Ø d 28	J_1	$kgcm^2$	11,60	11,84	10,47	9,10	8,42	7,79	7,55	7,02	7,13	6,80	6,83	6,60	6,48	6,41	6,37
	Ø d 32	J_1	$kgcm^2$	12,21	12,43	11,00	9,75	8,96	8,24	7,96	7,63	7,64	7,40	7,38	7,18	6,99	9,95	6,88

▲ with reference to output
* measured with 2 % nominal torque on output shaft
** charge centre of output shaft at output speed 250 min^{-1}. Please contact us for combined load applications
*** please consult the manufacturer for details of version with shrink disc

perm. torques at n_1 = 1500 min^{-1}

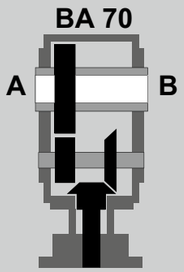

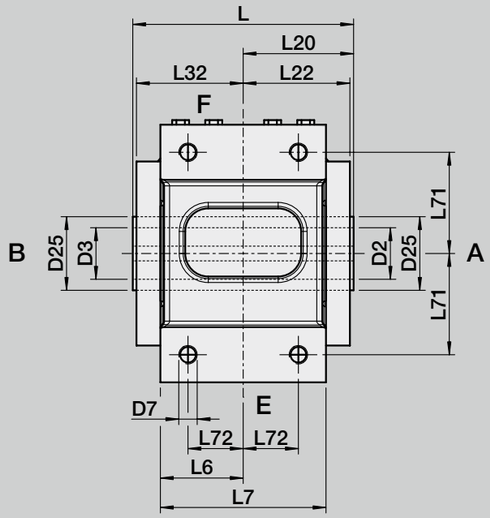

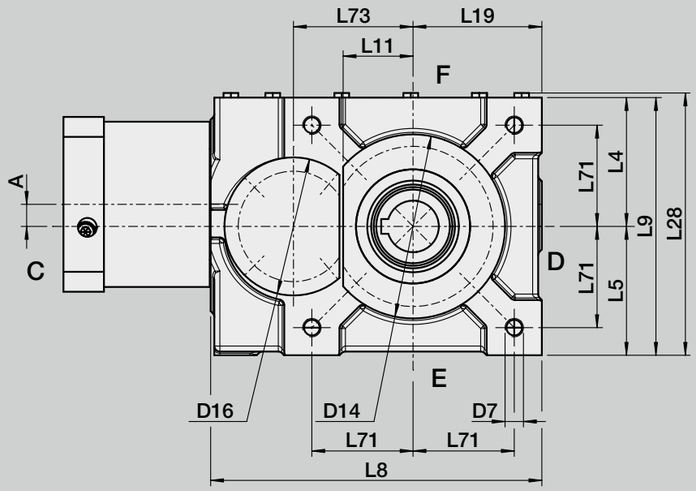

d	x	l1	Size	D2	D3	D7	D14	D16	D25	Key D2/D3 according to DIN 6885/1	L	L4	L5	L6	L7
G7				H7	H7		f7			JS9					
9	x	20													
11	x	23	1	22	22	M8	88	72	35	6	106	58	55	37,5	75
14	x	35													
19	x	40													
9	x	20													
11	x	23	2	28	28	M10	100	75	40	8	120	70	70	45	90
14	x	35													
19	x	40													
11	x	23													
14	x	30													
19	x	40	4	38	38	M12	127	90	55	10	140	85	85	55	110
24	x	50													
28	x	60													
32	x	60													

d	x	l1	Size	L8	L9	L11	L19	L20	L22	L28	L32	L71	L72	L73	A*
G7															
9	x	20													
11	x	23	1	155	113	33	55	53	51	116,5	51	44	28	55	12 / 0
14	x	35													
19	x	40													
9	x	20													
11	x	23	2	180	140	39	70	60	58	145	58	55	30	65	12 / 0
14	x	35													
19	x	40													
11	x	23													
14	x	30													
19	x	40	4	227	170	50	85	70	68	175	68	67	37	82	18 / 0
24	x	50													
28	x	60													
32	x	60													

* from ratio 33,6 otherwise 0

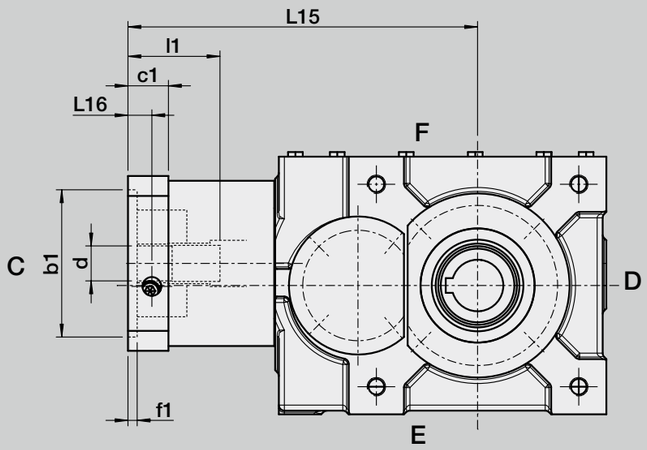

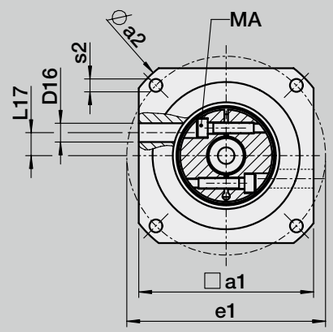

Gearbox dimensions

d	x	l1	Size	L15	L16	L17	c1	f1	D16	Screw type	MA
G7											[Nm]
9	x	20	1	180	13	12,5	22	5	10	M6 / 12.9	18
11	x	23		180	13	12,5	22	5	10	M6 / 12.9	18
14	x	30		180	13	12,5	22	5	10	M6 / 12.9	18
19	x	40		180	13	12,5	22	5	10	M6 / 12.9	18
9	x	20	2	190	13	12,5	22	5	10	M6 / 12.9	18
11	x	23		190	13	12,5	22	5	10	M6 / 12.9	18
14	x	30		190	13	12,5	22	5	10	M6 / 12.9	18
19	x	40		190	13	12,5	22	5	10	M6 / 12.9	18
11	x	23	4	227	15	16,5	25	5	14	M6 / 12.9	18
14	x	30		227	15	16,5	25	5	14	M6 / 12.9	18
19	x	40		227	15	16,5	25	5	14	M8 / 12.9	39
24	x	50		227	15	16,5	25	5	14	M8 / 12.9	43
28	x	60		227	15	16,5	25	5	14	M8 / 12.9	43
32	x	60		227	15	16,5	25	5	14	M8 / 12.9	43

Motor dimensions

a1		95	95	115	125	125	130	140
a2		105	120	140	140	140	160	190
b1	G8	70	80	95	80	95	110	130
e1		85	100	115	100	115	130	165
s2		M6 x12 Ø 7,0	M6 x12 Ø 7,0	M8 x16 Ø 9,0	M6 x12 Ø 7,0	M8 x16 Ø 9,0	M8 x16 Ø 9,0	M10 x20 Ø 11,0
		x	x	x			x	
		x	x	x			x	
		x	x	x			x	
		x	x	x			x	
		x	x	x			x	
		x	x	x			x	
		x	x	x			x	
		x	x	x			x	
					x	x	x	x
					x	x	x	x
					x	x	x	x
					x	x	x	x
					x	x	x	x
					x	x	x	x

MKSHF 1 – MKSHF 4
OUTPUT FLANGE
DIMENSIONS

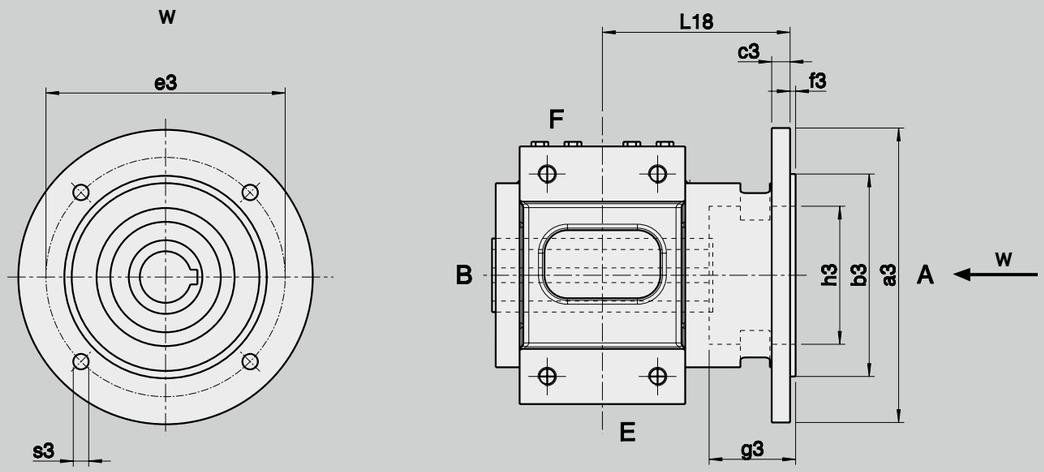

Order option: Flange and shrink disc available on either side A or B.

Size	a3	b3	c3	e3	f3	g3	h3	s3	L18
		f7							
1	140	95	10	115	3	35	63	Ø9	83
2	160	110	10	130	3	47	75	Ø9	102
4	200	130	10	165	3	52	96	Ø11	120

MKSH 1 – MKSH 4
SHRINK DISC
DIMENSIONS

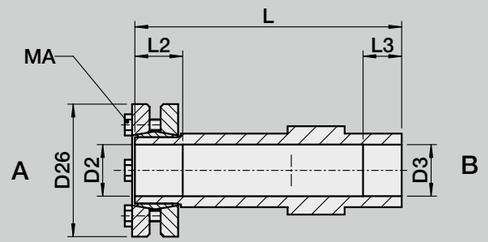

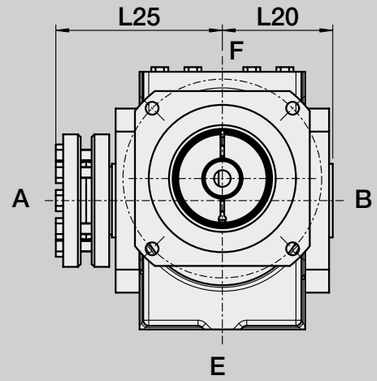

Order option: Flange and shrink disc available on either side A or B.
MKSH BA70 hollow shaft with shrink disc available either side A or B. MKSHF flange and shrink disc available either side A or B.

Size	D2/D3	D26	L	L20	L25	L2/L3	MA
	H7						The required clamping torques MA can be found on the shrink disc.
1	25	60	133	53	86	20/21	
2	28	72	145	60	88	26/21	
4	38	90	170	70	102	32/31	

Shaft material for the insert shaft: minimum yield strength approx. 360 N/mm².
Recommended shaft fit h6.

Version A

Attention! To make sure to transfer the motor torque in case of an emergency stop, it is required to use a motor shaft with keyway.

It is essential that the motor shaft and the bore on the clamping sleeve are dirt and grease free. Take the clamping bush and fit it to the motor shaft back to the shaft shoulder. Then tighten the coupling screws to the recommended torque. Do this in 3 step either way with 20% / 50% and then 100%. The torque which can be found on a sticker on the coupling. Grease the tooth profile of the clamping bush. With the gearbox in the vertical position and the input flange facing upwards mount the motor onto the gearbox and tighten the motor flange/gearbox fixing bolts.

Version B

It is essential that the motor shaft and the bore on the profiled bush are dirt and grease free. Take the profiled bush together with the shrink disc and fit it to the motor shaft back to the shaft shoulder. Then tighten the coupling screws to the recommended torque, which can befound on a sticker on the coupling. Grease the tooth profile of the profiled bush. With the gearbox in the vertical position and the input flange facing upwards mount the motor onto the gearbox and tighten the motor flange/gearbox fixing bolts.

Version C

The connection between motor and gearbox is made using a shrink disc bush without a keyway. For maximum performance we recommend the use of motors with reduced shaft tolerance and concentricity according to DIN 42955 R standards.

When fitting the motor, position the gearbox vertically with the motor flange upwards. Before assembly, degrease the motor shaft and the blind hole in the gearbox. Remove the lock screw or two plastic plugs from the motor flange of the gearbox, and insert a long Allen key to reach the tangential clamping screw in the coupling. The coupling must first be turned to the correct position for the screw to be accessible. Lower the motor vertically with the motor shaft in the blind hole. Ensure that the motor shaft has completely entered the bore, and that the flanges of motor and gearbox are in contact with each other over their full surface. The motor flange screws can now be inserted (do not tighten them completely). Then tighten the screws of the coupling with the required tightening torque. Do this in 3 steps alternately with 20%, 50% and then 100%.

The torque values for motor mounting can be accessed in our motor mounting manual, which is offered separately. Finish tightening the motor flange screws. After assembly, it is important to reinsert the lock screw or plastic plugs into their holes.

Version A

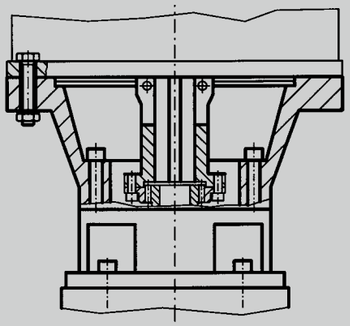

Version B

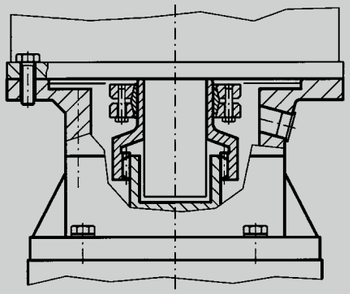

Version C

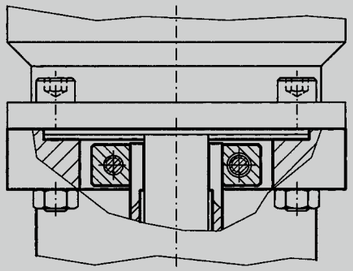

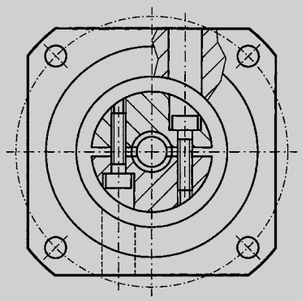

DISTRIBUTION PARTNERS

Germany

Region Nord
Lenze Vertrieb GmbH
Breslauer Str. 3
32699 Extertal
Phone +49 51 54 / 82 44-0
Telefax +49 51 54 / 82 44 44
E-Mail: sales-n.de@lenze.com
Internet: www.lenze.com

Region West
Lenze Vertrieb GmbH
Kelvinstraße 7
47506 NEUKIRCHEN-VLUYN
Phone +49 28 45 / 95 93-0
Telefax +49 28 45 / 95 93 93
E-Mail: sales-w.de@lenze.com
Internet: www.lenze.com

Region Mitte - Ost
Lenze Vertrieb GmbH
Austraße 81
35745 HERBORN
Phone +49 27 72 / 95 94-0
Telefax +49 27 72 / 95 94 94
E-Mail: sales-m.de@lenze.com
Internet: www.lenze.com

Region Ost
Lenze Vertrieb GmbH
Maxim-Gorki-Straße 2
01445 Radebeul
Phone +49 351 / 81167-0
Telefax +49 351/ 8116766
E-Mail: sales-e.de@lenze.com

Region Südwest
Wilhelm Vogel GmbH
Antriebstechnik
Stattmannstraße 1
72644 Oberboihingen
Telefon +49 70 22 60 01-0
Telefax +49 70 22 60 01-250
E-Mail: info@vogel-antriebe.de
Internet: www.vogel-antriebe.de

Region Süd
Lenze Vertrieb GmbH
Am Haag 12 a
82166 GRÄFELFING
Phone +49 89 / 89 56 14-0
Telefax +49 89 / 89 56 14 14
E-Mail: sales-s.de@lenze.com
Internet: www.lenze.com

Australia
FCR Motion Technology Pty. Ltd.
Automation Place / Unit 6
38-40 Little Boundary Road
LAVERTON NORTH,
3026 VICTORIA
Phone +61 3 / 93 62 68 00
Telefax +61 3 / 93 14 37 44
E-Mail: vicsales@fcrmotion.com
Internet: www.fcrmotion.com

Austria
Lenze Antriebstechnik GmbH
Ipf-Landesstraße 1
4481 ASTEN
Phone +43 72 24 / 21 0-0
Telefax +43 72 24 / 21 0-109
E-Mail: info@lenze.at
Internet: www.Lenze.com/de-at/home/

Office Dornbirn
Lustenauer Straße 64
6850 DORNBIRN
Phone +43 72 24 / 21 0-0
Telefax +43 72 24 / 21 0-7299

Office Wr. Neudorf
Triester Straße 14/109
2351 WR. NEUDORF
Phone +43 72 24 / 21 0-0
Telefax +43 72 24 / 21 0-7099

Office Unterpremstätten
Seering 2 / 4. OG
8141 UNTERPREMSTÄTTEN
Phone +43 72 24 / 21 0-0
Telefax +43 72 24 / 21 0-7199

Belgium
Lenze b. v. b. a
Rijksweg 10c
2880 Bornem
Phone +32 3 / 54 26 20 0
Telefax +32 3 / 54 13 75 4
E-Mail: sales@lenze.be
Internet: www.Lenze.com/nl-be/home/

Brazil
IMETEX Indústria e Comércio Ltda.
Rua Alexandre Dumas 1209/1213
CEP 04717-902
CHACARA STO. ANTONIO -
SANTO AMARO -SP
Phone +55 11 / 51 80 17 77
Telefax +55 11 / 51 81 17 77
E-Mail: contato@imetex.com.br
Internet: www.imetex.com.br

China
On Gear E & M Products Ltd.
Room 506-509, 5/F.,
CCT Telecom Building,
11 Wo shing Street,
Fo Tan, HONG KONG
Phone +8 52 / 26 90 33 20
Telefax +8 52 / 26 90 23 26
E-Mail: emp@ongear.com.hk
Internet: www.ongear.hk

On Gear Trading (Shanghai)
Co. Ltd (Beijing Office)
Room. 16C, Block B
Ying Te International Apartment
No. 28, Xibahe Xi Li
Chaoyang District
BEIJING, 100028
P.R. CHINA
Postal code: 100028
Phone +010 / 64 47 60 11
Telefax +010 / 64 47 60 10
E-Mail: bjoffice@ongear.com.hk
Internet: www.ongear.hk

On Gear E & M Products Ltd.
(Liaison office)
Rm. 16D, Zhabei Square
No. 99 Tian Mu Xi Road
SHANGHAI
Postal code: 200070
Phone +86 21 / 63 80 31 45
Telefax +86 21 / 63 80 36 81
E-Mail:
Internet: www.ongear.hk

On Gear E & M Products Ltd.
(Liaison office)
Room 1415-1416, Fu Ying
International Building, No.3 of 166
Changgang Zhong Road,
Haizhu District, GUANGZHOU
Postal code: 510250
Phone +86 20 / 34 33 29 95
Telefax +86 20 / 34 33 29 90
E-Mail: gzoffice@ongear.com.hk
Internet: www.ongear.hk

Czech Republic
Lenze s.r.o.
Central Trade Park D1
396 01 HUMPOLEC
Phone +420 565 507 111
Telefax +420 565 507 399
E-Mail: info@lenze.cz
Internet: www.Lenze.com/cs-cz/home/

Technická kancelář
Červený Kostelec
Lenze, s.r.o.
17. listopadu 510
549 41 ČERVENÝ KOSTELEC
Phone +420 491 467 111
Telefax +420 491 467 166
E-Mail: info-CK@lenze.cz
Internet: www.Lenze.com/cs-cz/home/

Denmark
Blue Control A/S
Topstykket 27
3460 Birkerød
Phone +45 70 27 87 66
E-Mail: info@bluecontrol.dk
Internet: www.bluecontrol.dk

Finland
Lenze AB
Pihatörmä 1 A, 3. krs
02240 Espoo
Phone +358 10 239 1390
Telefax +358 10 239 1398
E-Mail: lenze@lenze.fi
Internet: www.Lenze.com/fi-fi/home/

France
Lenze SAS
165 avenue du Bois de la Pie
Bâtiment I, Parc des Reflets
ZA Paris Nord 2
95700 Roissy-en-France
Phone +33 1 49 90 12 12
Telefax +33 1 49 90 12 10
E-Mail: contact.fr@lenze.com
Internet: www.lenze.com/fr-fr/home/

Hungary
Lenze Hajtástechnika Kft.
Keleti u.7
2040 BUDAÖRS
Phone +36 23 / 50 13 20
Telefax +36 23 / 50 13 39
E-Mail: info@lenze.hu
Internet: www.Lenze.com/hu-hu/home/

India
Lenze Mechatronics
Private Limited
Plot No. I-19, Gat No – 1898
Khed City, Kanhersar
Taluka – Khed Dist -
Pune - 410505
Phone +91 2135 616900
Phone +91 2135 616999
Telefax +91 2135 616998
Enquiry: Marketing@Lenze.in
Service: Service@Lenze.in
Internet: www.Lenze.com/en-in/home/

Iran
Tavan Ressan Co.
No.5, Alizadeh Alley,
North Bahar Str. Sadr Highway
Tehran-1931813556
Head office:
Phone +98 21 / 2264 8914 to 18
Telefax +98 21 / 2200 9003
E-Mail: info@tavanresan.com
Internet: www.Lenze.ir

Israel
Greenshpon RAM
Boaz 3
34487 HAIFA
Phone +972 52 - 4 76 14 26
Telefax +972 4 - 8 14 60 37
E-Mail: ram@greenshpon.de
Internet: www.greenshpon.de

Italy
Lenze Gerit S.r.l.
Viale Tibaldi, 7
20136 MILANO
Phone +39 02 / 27 09 81
Telefax +39 02 / 27 09 82 90
E-Mail: mail@gerit.it
Internet: www.lenze.com/it-it/home/

Korea
Dana Automation Inc.
#306. Hyundai Parkville
108. Kuro 5-Dong, Kuro-Ku
SEOUL KOREA (08298)
Phone +82-2-830-8701 (Rep)
Telefax +82-2-830-8702
E-Mail: danaauto@hanmail.net
E-Mail: tsmaing@naver.com
Internet: www.danaauto.co.kr

MECHATRON INC
231 Jomyeong-gwan
1666 Sankyeok-dong Buk-gu
Daegu 41518 Korea
Phone +82-53-939-9501 (Rep)
HP / +82-10-2530-1313
Telefax +82-53-939-9500
E-Mail: kbu@mechatron.net
Internet: www.mechatron.kr

Lithuania/Latvia/Estonia
Lenze UAB
Chemijos Str. 9D,
51331 KAUNAS
Phone +370 37 407174
Telefax +370 37 407175
E-Mail: info@lenze.lt
Internet: www.Lenze.com/lt-lt/home/
www.Lenze.com/lv-lv/home/

Lenze UAB
ZDC - Zemgales darijumu centrs,
Atmodas str. 19
3001 JELGAVA
Phone +371 630 23388
Telefax +371 630 23388
E-Mail: info@Lenze.lv
Internet: www.Lenze.com/lv-lv/home/

Mexico
ACESA-DRIVES, S.A. DE C.V.
Nebraska No. 46
Col. Nápoles
C.P. 03810 México D.F.
Phone +52 55 2636-3540
Phone +52 55 2636-3550
Phone +55 55 2898-5528
Telefax +52 55 2636-3541
E-Mail: lenze@acesa-drives.com
Internet: www.lenze.mx

Netherlands
Lenze B. V.
Ploegweg 15
5232 BR`S-HERTOGENBOSCH
Phone +31 73 / 64 56 50 0
Telefax +31 73 / 64 56 51 0
E-Mail: lenze@lenze.nl
Internet: www.Lenze.com/nb-no/home

New Zealand
OPTIBELT TRANZ NEW ZEALAND
CORPORATION LTD.
343 Church Street
Penrose, AUCKLAND
Phone +64 9 / 63 45 51 1
Telefax +64 9 / 63 45 51 8
E-Mail: sales@tranzcorp.co.nz
Internet: www.tranzcorp.co.nz

Norway
Lenze as
Stallbakken 5C
2005 Raelingen
Phone +47 / 64 80 25 10
E-Mail: post@Lenze.no
Internet: www.Lenze.no

Poland
Lenze Polska Sp. z o.o.
ul. Rozdzienskiego 188b
40-203 KATOWICE
Phone +48 32 / 20 39 77 3
Telefax +48 32 / 78 10 18 0
E-Mail: lenze@lenze.pl
Internet: www.Lenze.com/pl-pl/home/

Russia
OOO Lenze
Schelkovskoye shossee 5
105122 MOSCOW
Phone +7 495 921 2350
Telefax +7 495 921 2359
E-Mail: info.ru@lenze.com
Internet: www.lenze.com/ru-ru/home/

IDS Ltd
St. Stahanovskaya 20
109428 Moscow
Phone +7 495 971-77-62
Telefax +7 499 171-25-39
E-Mail: sales@vogel-ids.ru
Internet: www.vogel-ids.ru

Schweden
Lenze AB
Teknikringen 8
583 30 LINKÖPING
Phone +46 13-35 58 00
Telefax +46 13-10 36 23
E-Mail: info@lenze.se
Internet: www.Lenze.com/sv-se/home/

Singapore/Indonesia/Malaysia
Lenze South East Asia Pte. Ltd
31 Woodlands Close
#06-19 Woodlands Horizon
Singapore 737855
Phone +65 6694 1596
Telefax +65 6694 1593
E-Mail: marketing.sg@lenze.com
Internet: www.lenze.com

Slovenia
LENZE pogonska tehnika, d.o.o.
Kidriceva 24
3000 CELJE
Phone +386 03 426 46 40
Telefax +386 03 426 46 50
E-Mail: info@lenze.si
Internet: www.Lenze.com/sl-si/home/

South Africa
S. A. Power Services (Pty.) Ltd.
Unit 14 Meadowbrook Business
Estates Jacaranda Ave
Olivedale, RANDBURG 2158
P. O. Box 1137
RANDBURG 2125
Phone +27 11 462 8810
Telefax +27 11 704 5775
E-Mail: sales@sapower.co.za
Internet: www.Lenze.com/en-za/home/

Spain
Lenze Transmisiones, S.A.
Edificio TCA
c/ Henri Dunant, 9.
08173 Sant Cugat del Vallès
Barcelona
Phone +34 902 02 79 04
Telefax +34 902 02 63 69
E-Mail: Lenze@Lenze.es
Internet: www.Lenze.com/es-es/home/

Switzerland
Lenze Bachofen AG
Ackerstrasse 45
8610 USTER-ZÜRICH
Phone +41 43 399 14 14
Telefax +41 43 399 14 24
E-Mail: info@lenze-bachofen.ch
Internet: www.lenze-bachofen.ch

Vente Suisse Romande
Route de Prilly 25
1023 CRISSIER
Phone +41 21 / 63 721 90
Telefax + 41 21 / 63 547 62
Internet: www.lenze-bachofen.ch

Turkey
Lenze Mühendislik San. Ve. Tic. A.S.
Osmangazi Mahallesi
Aladağ Sokak No. 1
34887 SANCAKTEPE / ISTANBUL
Phone +90 216 / 316 51 38
Telefax +90 216 / 443 42 77
E-Mail: sales.tr@lenze.com
Internet: www.lenze.com/en-tr/home/

United Arab Emirates
LPT (FZC)
X4 Building No. 37
Sharjah Airport Free Zone
(SALF ZONE) Sharjah
Phone +971 6 5573205
Telefax +971 6 5573206
E-Mail: info@lenze.ae

United Kingdom / Eire
Lenze Ltd.
Fraser Road,
Priory Business Park,
Bedford MK44 3WH
Phone +44 1234 / 753 200
Telefax +44 1234 / 753 220
E-Mail: uk.sales@lenze.com
Internet: www.Lenze.com/en-gb/home/

Ukraine
SV Altera Ltd.
Ivana Lepse blvd., 4
03680 KYIV
Phone +380-44-496-1888
Telefax +380-44-496-1818
E-Mail: office@sv-altera.com
Internet: www.Lenze.org.ua

USA
Lenze Americas Corporation
630 Douglas Street
UXBRIDGE, MA 01569
Phone +1 508 / 278-9100
Telefax +1 508 / 278-7873
E-Mail: info@lenzeamericas.com
Internet: www.lenzeamericas.com

VOGEL Project number
(to be filled out by VOGEL representative):

Customer / Company

Customer no.

Street

Postal code Place

Country

Contact person

Phone Fax

E-mail

Date

Line

Note

Registered by (Name of contact at VOGEL)

Date

Reply fax to ...

Telefax: +49 7022 / 6001-

Reply e-mail to ...

ENQUIRY AND ORDER FORM

Gearbox data	**Symbol**	**Unit**	
Quantity			
Gearbox type			
Gearbox size			
Ratio	i		
Construction type			
Backlash	j	arcmin	☐ Standard ☐ Reduced ☐ Value
Operating hours/year:			
Operating hours/day:			
Duty:	%	ED	
Lubrication	☐ Synthetic ☐ Mineral	☐ Oil ☐ Grease	☐ For use in the food industry
Side under:			
Breather side:			
Oil sight glass side:			
Drainage side:			

Gearbox performance data	**Symbol**	**Unit**	
Nominal input speed	n_{1N}	min^{-1}	
Max. input speed	$n_{1maxzul}$	min^{-1}	
Nominal output torque	T_{2Nzul}	Nm	
Max. output torque	T_{2max}	Nm	
Nominal power input	P_{1N}	kW	
Max. power input	P_{1max}	kW	

Gearbox shaft loads output	**Symbol**	**Unit**	
Radial load output	F_{2r}	N	
Distance radial	y2	mm	
Distance axial	x2	mm	
Axial load output	F_{2a}	N	
Distance radial	y2	mm	
Distance axial	x2	mm	
According to drawing			

ENQUIRY AND ORDER FORM

Application			
Duty type			
No. of cycles	Z	1/h	
Ambient temperature		°C	
Ambient air	☐ Free of particles	☐ Dust	☐ Other:
	☐ Fibres	☐ Gas	
Customer drawing - Application - Number			

Motor data	**Symbol**	**Unit**	
Motor type			
Capacity		kW	
Speed		min^{-1}	
Outer dim. flange		mm	
Centring-Ø (b1)		mm	
Pitch circle-Ø (e1)		mm	
Motor mounting (s2)			
Motor shaft (Ø d x l1)		mm	
Direct connection			☐ Yes ☐ No
Connection through coupling:			

Additional data for ATEX versions	**Symbol**	**Unit**	
Category:			
Zone:			
Explosion group:			
Temperature class:			
Max. surface temperature:		°C	

Note!

Missing data will be clarified individually. Further information following design.

Further information/requirements:

NOTES

Your stamp:

Wilhelm Vogel GmbH Antriebstechnik
Stattmannstrasse 1 · 72644 Oberboihingen · Germany
Phone +49 (0)70 22 / 60 01-0 · Fax Distribution +49 (0)70 22 / 60 01-250 · Fax Purchasing +49 (0)70 22 / 60 01-444
info@vogel-antriebe.de · www.vogel-antriebe.de

Technical modifications, printing errors and errors reserved / Printed in the Federal Republic of Germany 05/2018 / Catalogue article number: 150820